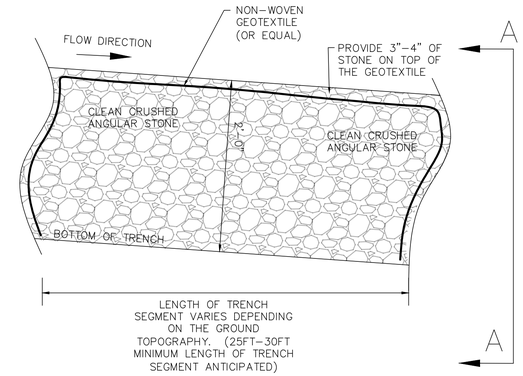

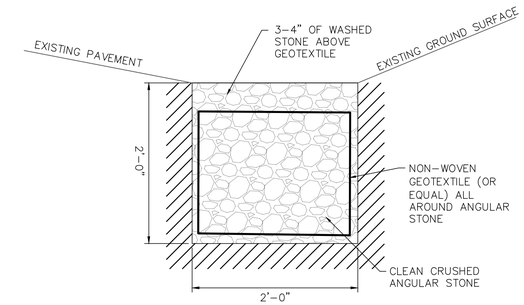

A-A
CROSS-SECTION
NOT TO SCALE

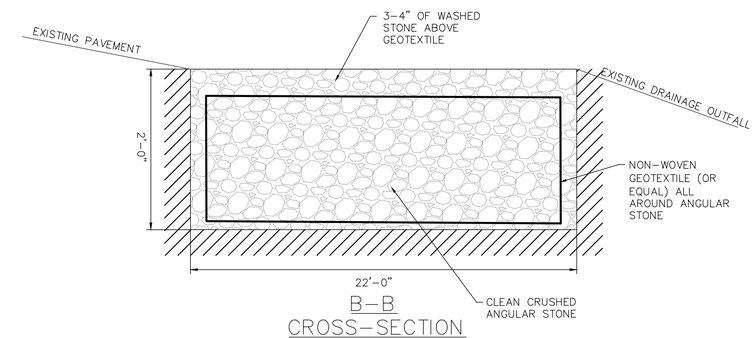

B-B
CROSS-SECTION
NOT TO SCALE

STONE TRENCH DETAIL

NOT TO SCALE

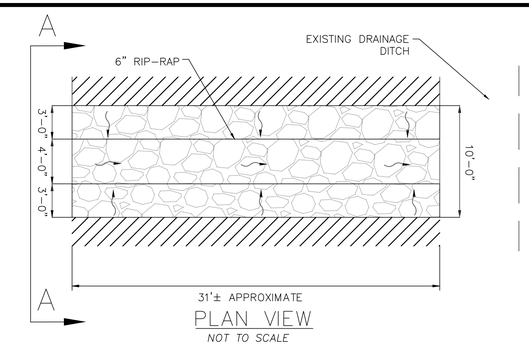

PLAN VIEW
NOT TO SCALE

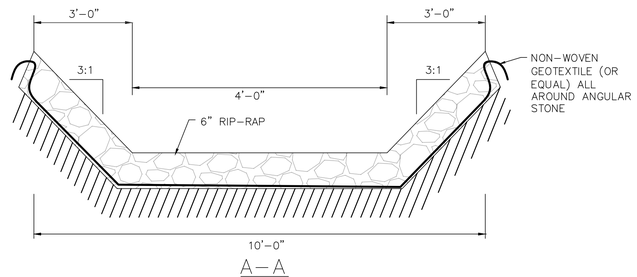

A-A
CROSS-SECTION
NOT TO SCALE

RIP RAP OUTFALL DETAIL

NOT TO SCALE

20 10 0 20 40

Date	Description	No.

Revisions

7-20-2020

COMMONWEALTH OF MASSACHUSETTS
GABRIEL R. CROCKER
CIVIL
No. 47917
REGISTERED PROFESSIONAL ENGINEER

GABRIEL R. CROCKER
PROFESSIONAL ENGINEER, MA REGISTRATION #47917

Crocker Design Group
2 SHARP STREET, UNIT B
HINGHAM, MA 02043
P: 781-919-0808

Drawing Title

30 POND PARK ROAD STORMWATER OUTFALL REPAIR PLAN

Project No.	100-100
Date	07/20/2020
Scale	1"= 20'
Drawn By	CRM
Approved By	GC

Drawing No.

X-2