WHITE Aluminum Exterior
PAINTED Wood Interior

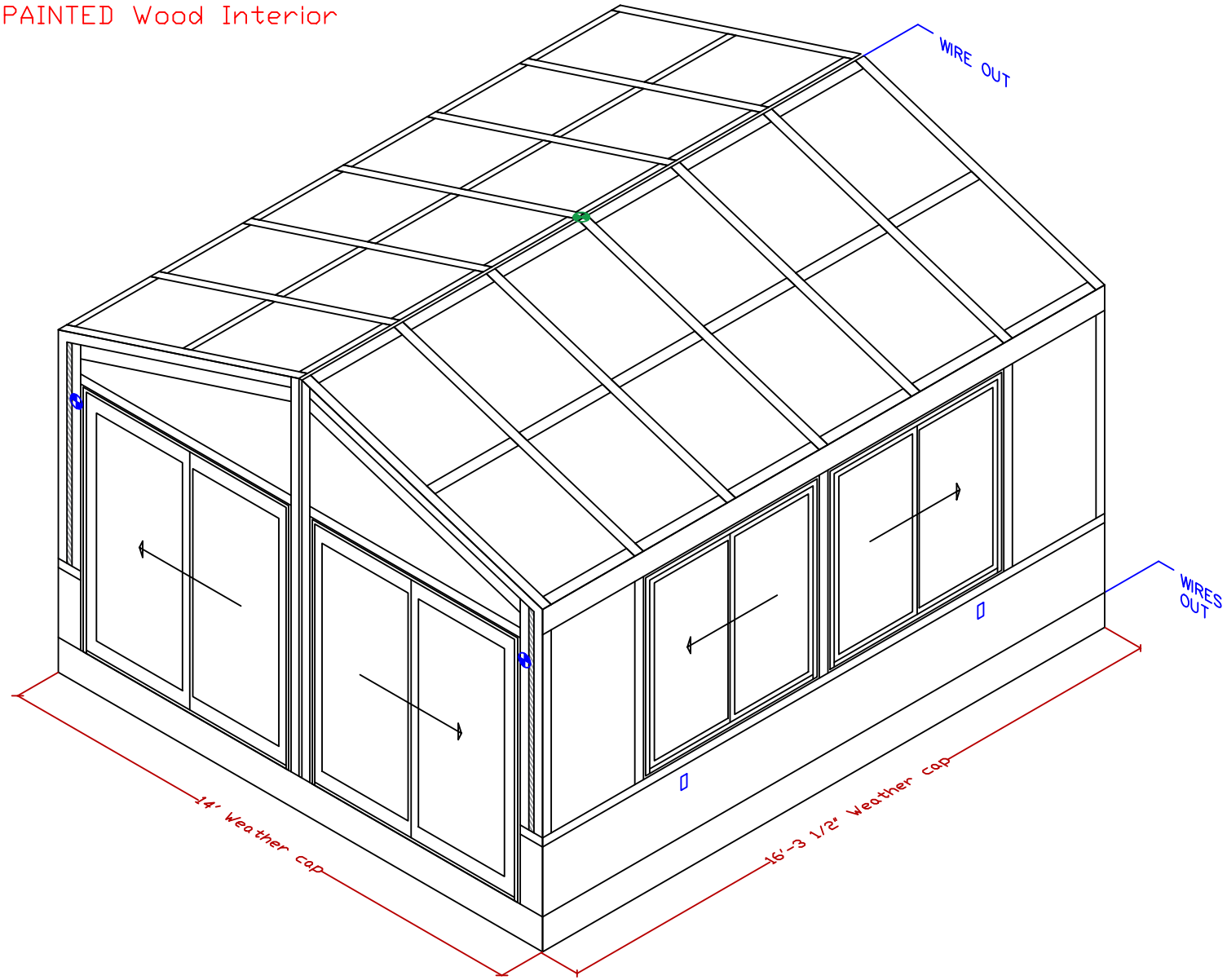

Isometric View North West

CUSTOMER SIGNATURE DATE

Drawn:	MG
Date:	6-15-20
Scale:	5/16"=1'-0"
Iso	

Chris Harrison
Carolyn Murray
121 High Street
Hingham, MA 02043

Brady-Built SUNROOMS

160 Southbridge St.
Auburn, MA 01501
Tel: 508-798-2600
Fax: 508-798-3034
www.sunroomsbybrady.com

Confidential, Brady-Built Inc.

6-15-20	Revision 2

Sheet 2 of 20	6-15-20	Revision 2				

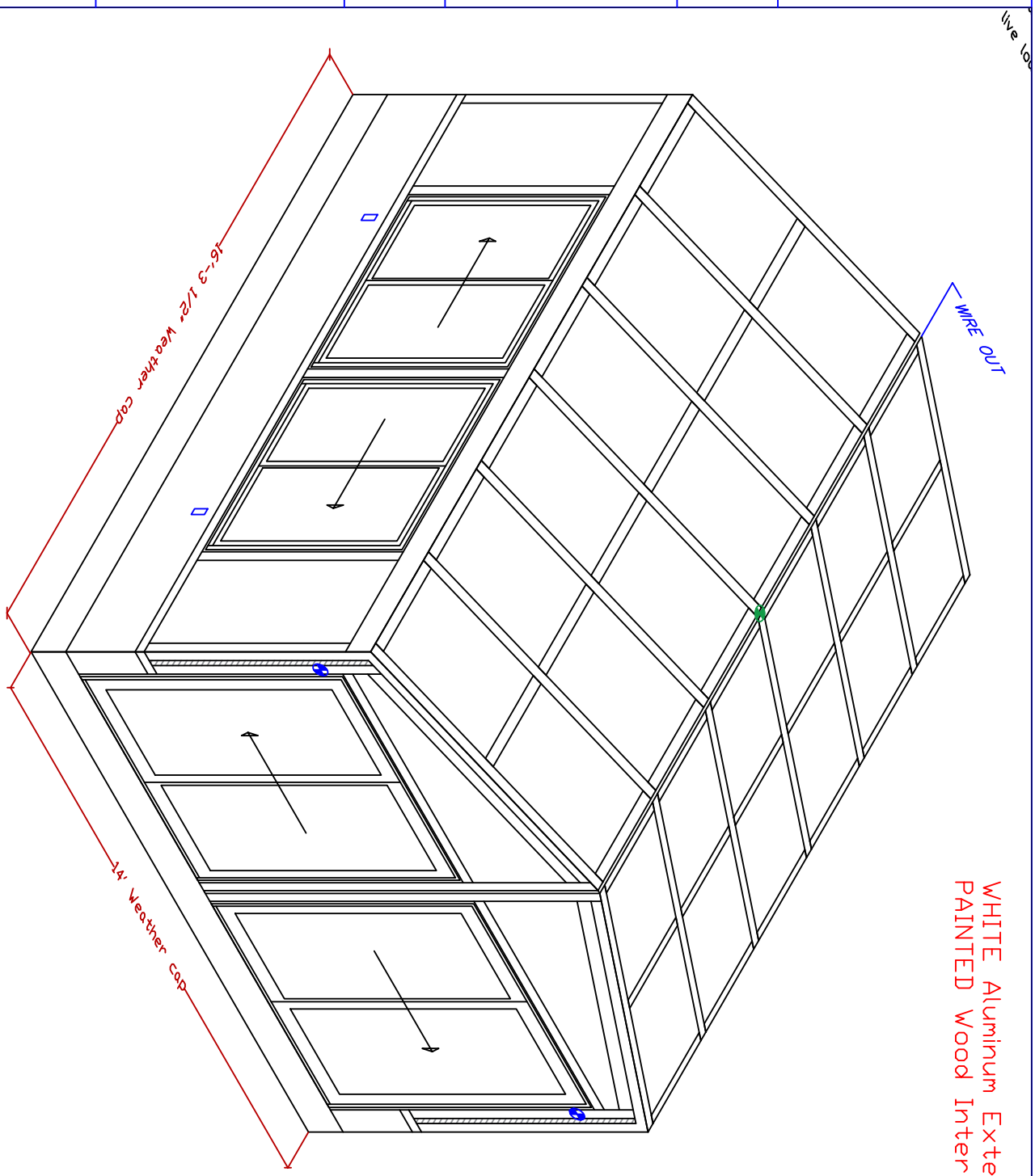

live lo

WHITE Aluminum Exterior
PAINTED Wood Interior

Isometric View North East

CUSTOMER SIGNATURE

DATE

160 Southbridge St.
Auburn, MA 01501
Tel: 508-798-2600
Fax: 508-798-3034
www.sunroomsbybrady.com

Brady-Built SUNROOMS

Drawn:	MG
Date:	6-15-20
Scale:	5/16"=1'-0"
Iso2	

Chris Harrison
Carolyn Murray
121 High Street
Hingham, MA 02043

Confidential, Brady-Built Inc.

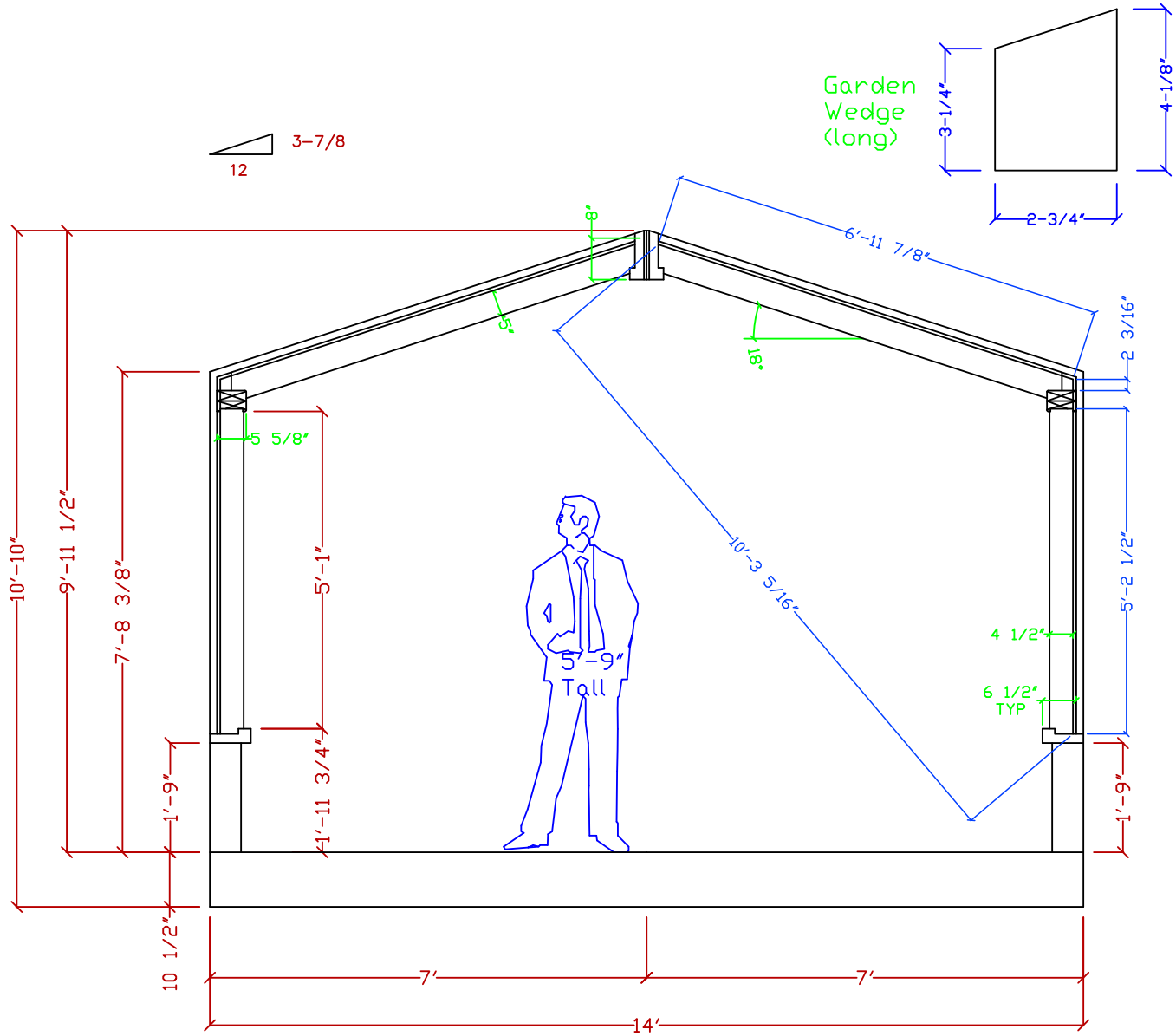

Cross Section at Glued
Laminated Timber Frame

CUSTOMER SIGNATURE DATE

Sheet 3 of 20	5-21-20	Preliminary Drawing	7-17-20	Shop drawings
	6-3-20	Revision 1		

Chris Harrison
Carolyn Murray
121 High Street
Hingham, MA 02043

Drawn:	MG
Date:	5-21-20
Scale:	3/8"=1'-0"
Beam	

Brady-Built SUNROOMS

160 Southbridge St.
Auburn, MA 01501
Tel: 508-798-2600
Fax: 508-798-3034
www.sunroomsbybrady.com

Confidential, Brady-Built Inc.

Sheet 4 of 20	5-21-20	Preliminary Drawing				
	6-3-20	Revision 1				

CUSTOMER SIGNATURE

DATE

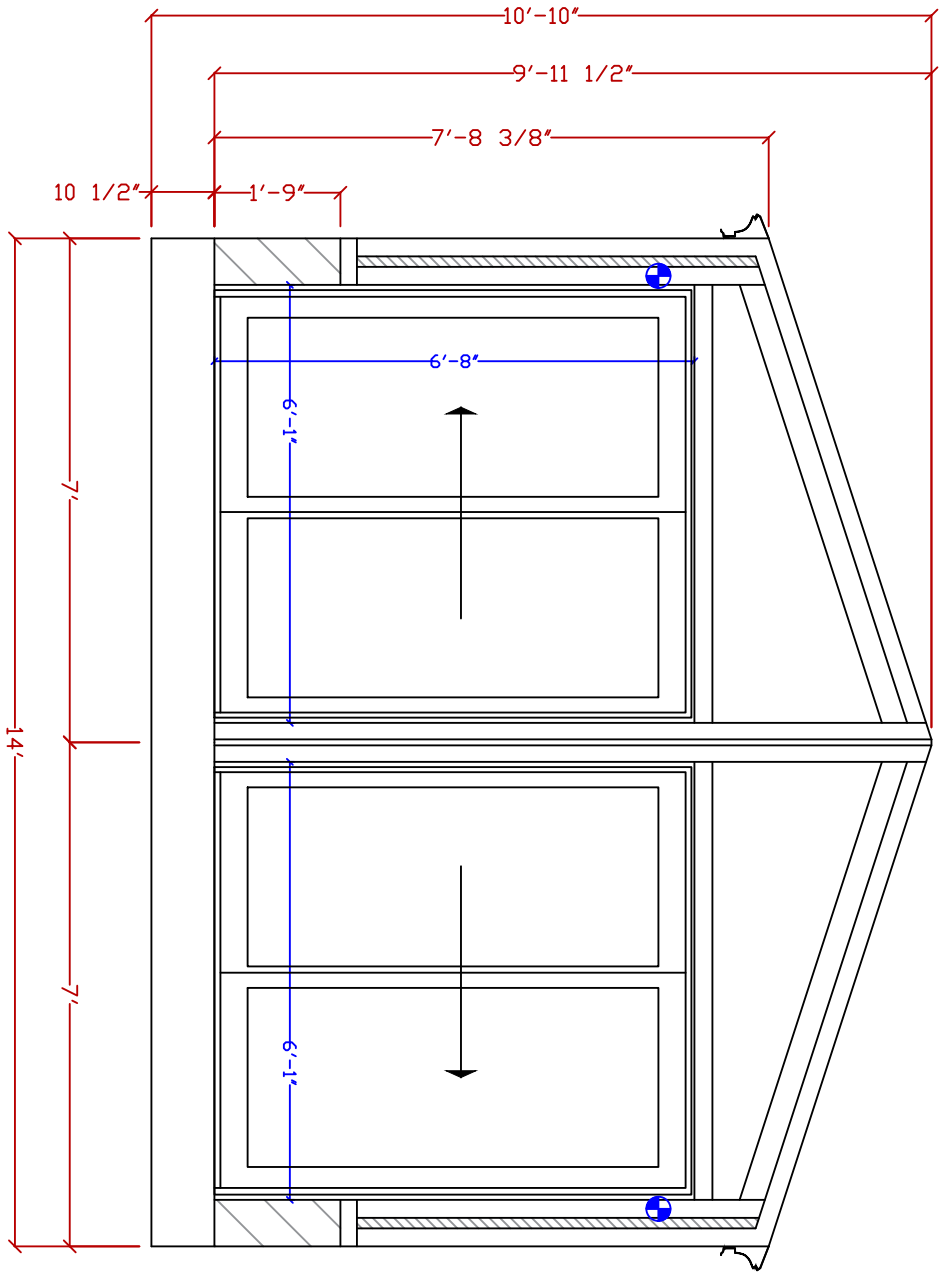

Elevation at Front (North) Wall

160 Southbridge St.
Auburn, MA 01501
Tel: 508-798-2600
Fax: 508-798-3034
www.sunroomsbybrady.com

Brady-Built SUNROOMS

Drawn:	MG
Date:	5-21-20
Scale:	3/8"=1'-0"

Front

Chris Harrison
Carolyn Murray
121 High Street
Hingham, MA 02043

Confidential, Brady-Built Inc.

Sheet 5 of 20	5-21-20	Preliminary Drawing	6-15-20	Revision 2		
	6-3-20	Revision 1				

CUSTOMER SIGNATURE

DATE

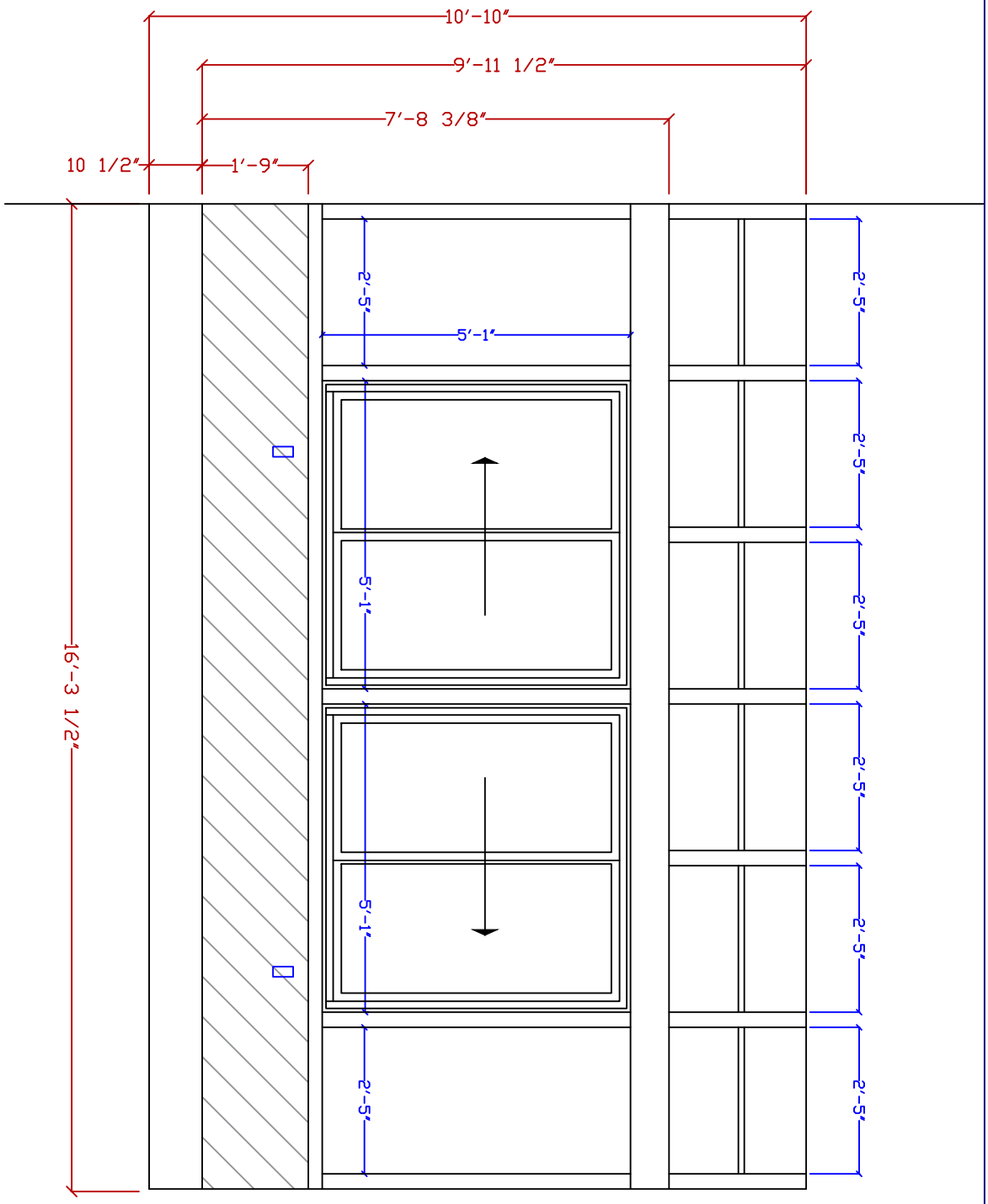

Elevation at Left (East) Wall

160 Southbridge St.
Auburn, MA 01501
Tel: 508-798-2600
Fax: 508-798-3034
www.sunroomsbybrady.com

Brady-Built SUNROOMS

Drawn:	MG
Date:	5-21-20
Scale:	3/8"=1'-0"

Left

Chris Harrison
Carolyn Murray
121 High Street
Hingham, MA 02043

Confidential, Brady-Built Inc.

Sheet 6 of 20	5-21-20	Preliminary Drawing	6-15-20	Revision 2		
	6-3-20	Revision 1				

CUSTOMER SIGNATURE

DATE

Elevation at Right (West) Wall

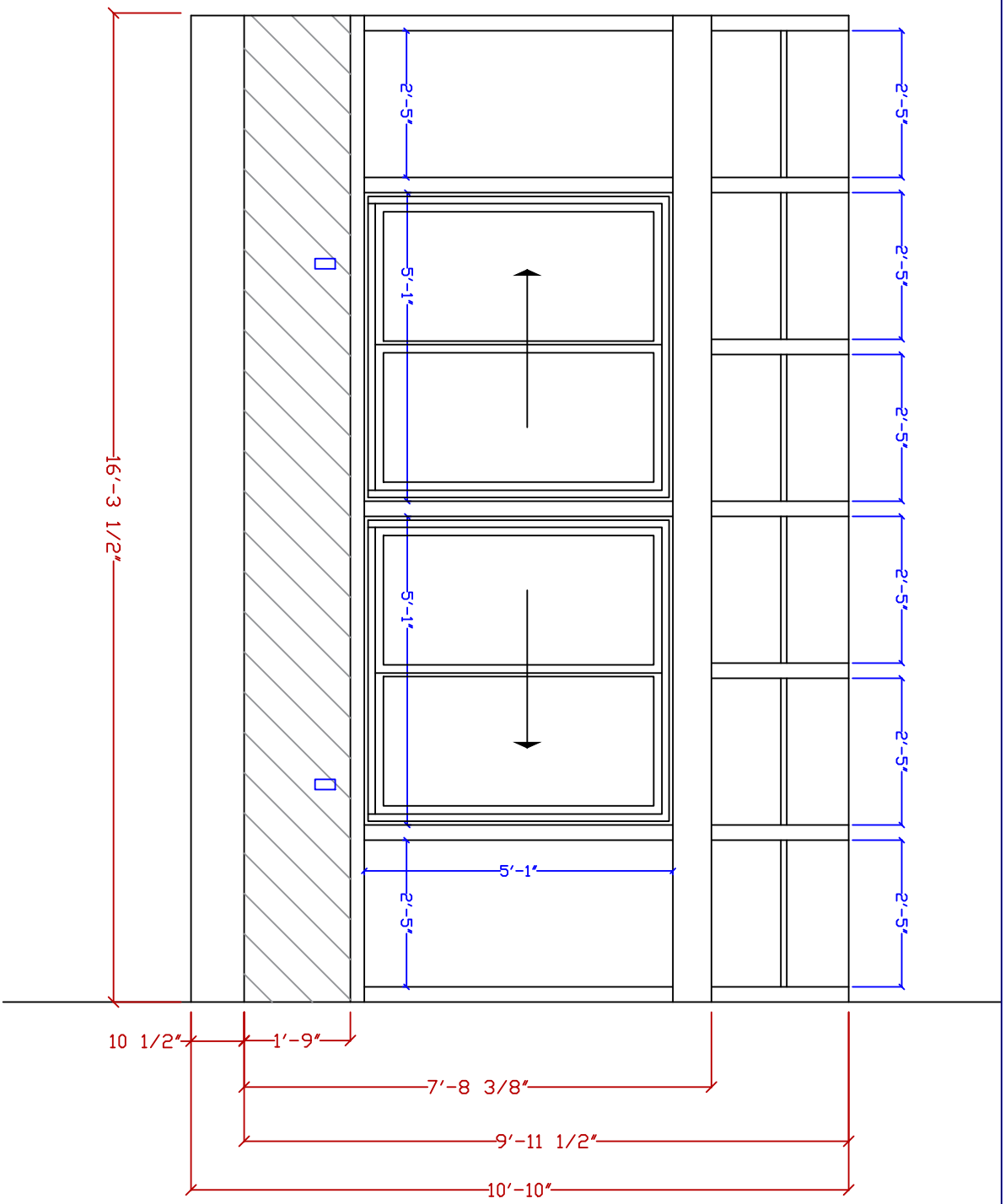

160 Southbridge St.
Auburn, MA 01501
Tel: 508-798-2600
Fax: 508-798-3034
www.sunroomsbybrady.com

Brady-Built SUNROOMS

Drawn:	MG
Date:	5-21-20
Scale:	3/8"=1'-0"

Right

Chris Harrison
Carolyn Murray
121 High Street
Hingham, MA 02043

Confidential, Brady-Built Inc.

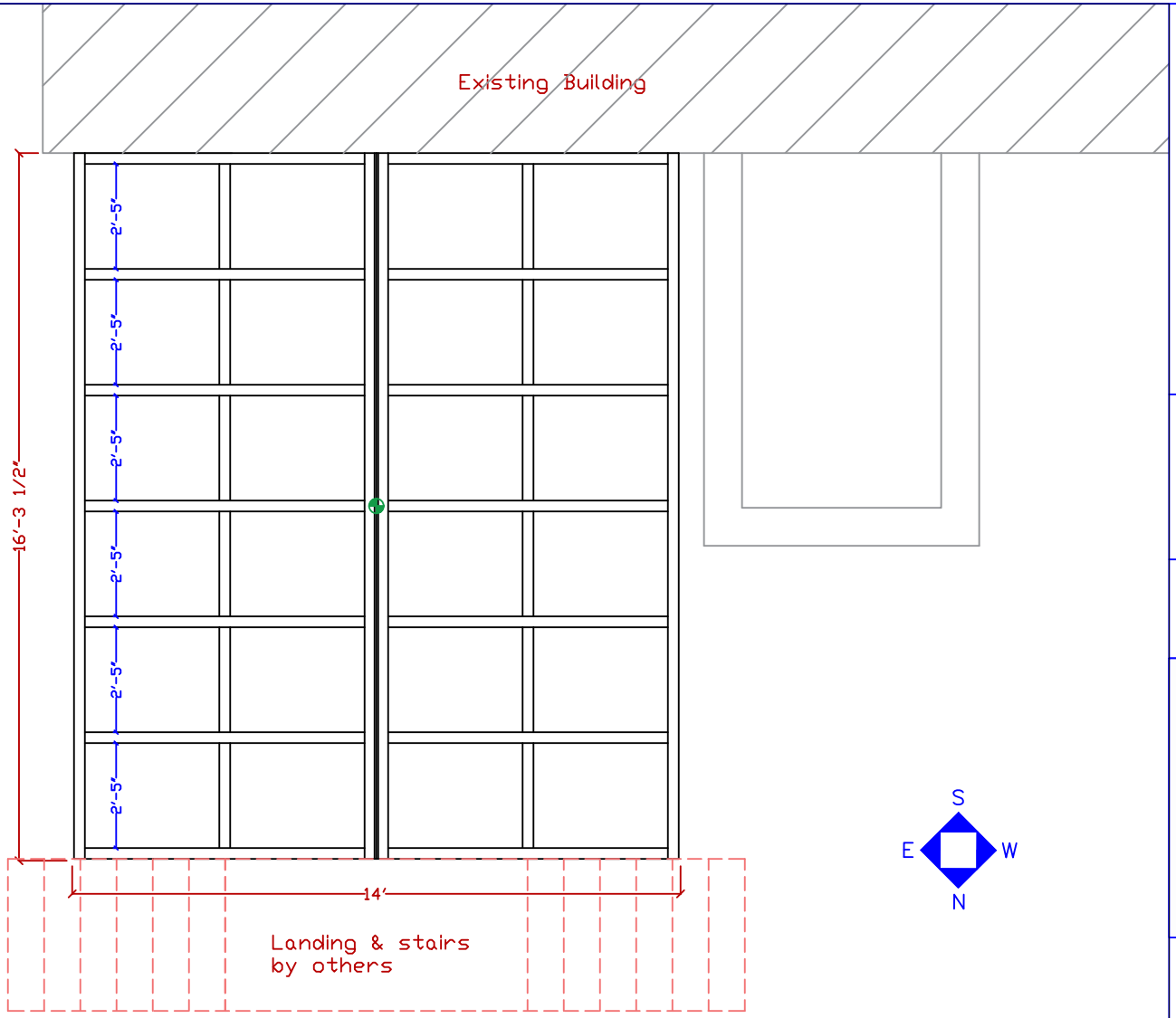

Plan View at Roof

CUSTOMER SIGNATURE DATE

Sheet 7 of 20

6-3-20	Revision 1

Chris Harrison
Carolyn Murray
121 High Street
Hingham, MA 02043

Drawn:	MG
Date:	6-3-20
Scale:	1/4"=1'-0"

Roof

Confidential, Brady-Built Inc.

Brady-Built SUNROOMS
160 Southbridge St.
Auburn, MA 01501
Tel: 508-798-2600
Fax: 508-798-3034
www.sunroomsbybrady.com

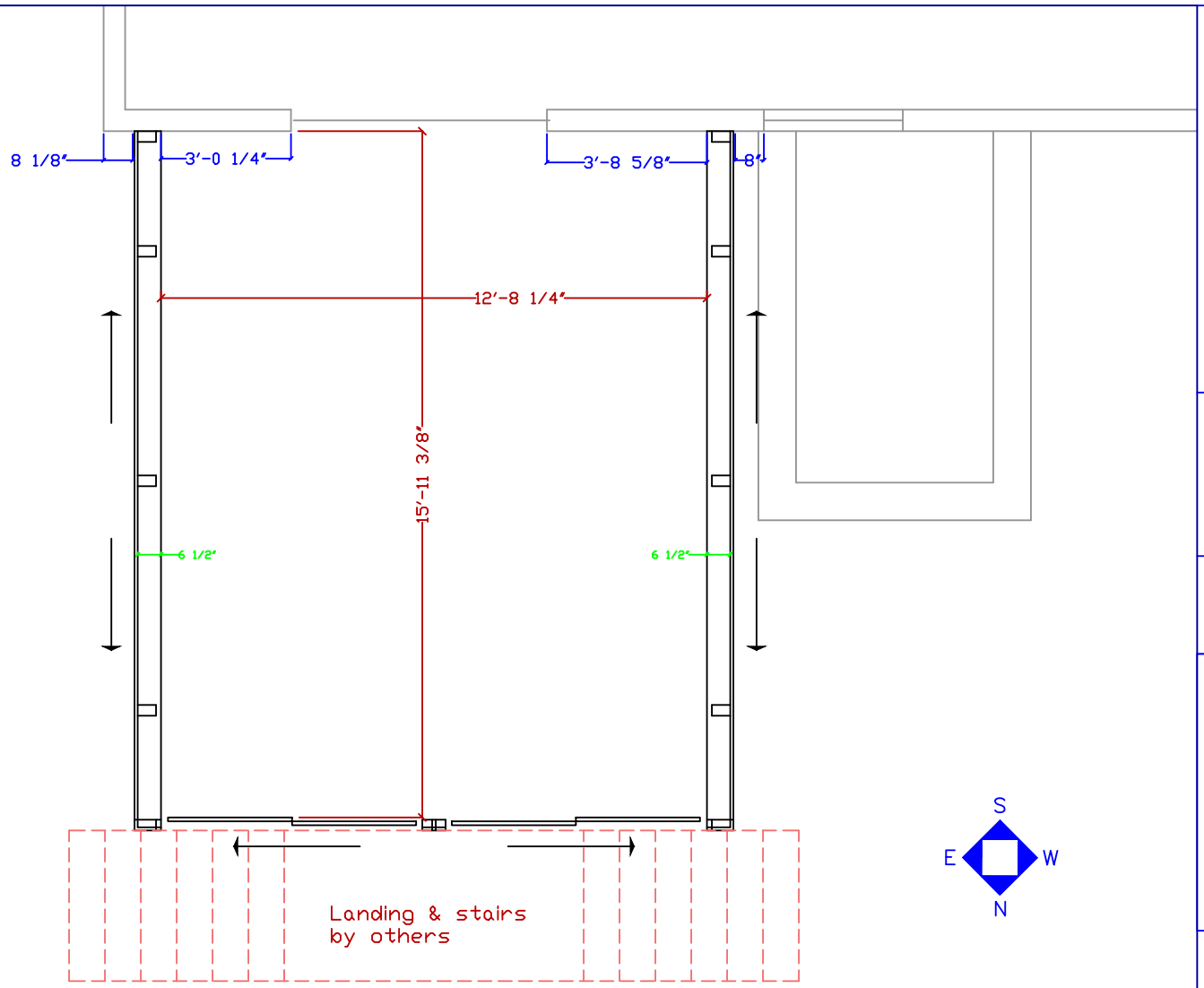

Plan View at Sill

CUSTOMER SIGNATURE DATE

Drawn:	MG
Date:	6-3-20
Scale:	1/4"=1'-0"
Sill	

Chris Harrison
Carolyn Murray
121 High Street
Hingham, MA 02043

Confidential, Brady-Built Inc.

Brady-Built SUNROOMS

160 Southbridge St.
Auburn, MA 01501
Tel: 508-798-2600
Fax: 508-798-3034
www.sunroomsbybrady.com

6-3-20	Revision 1

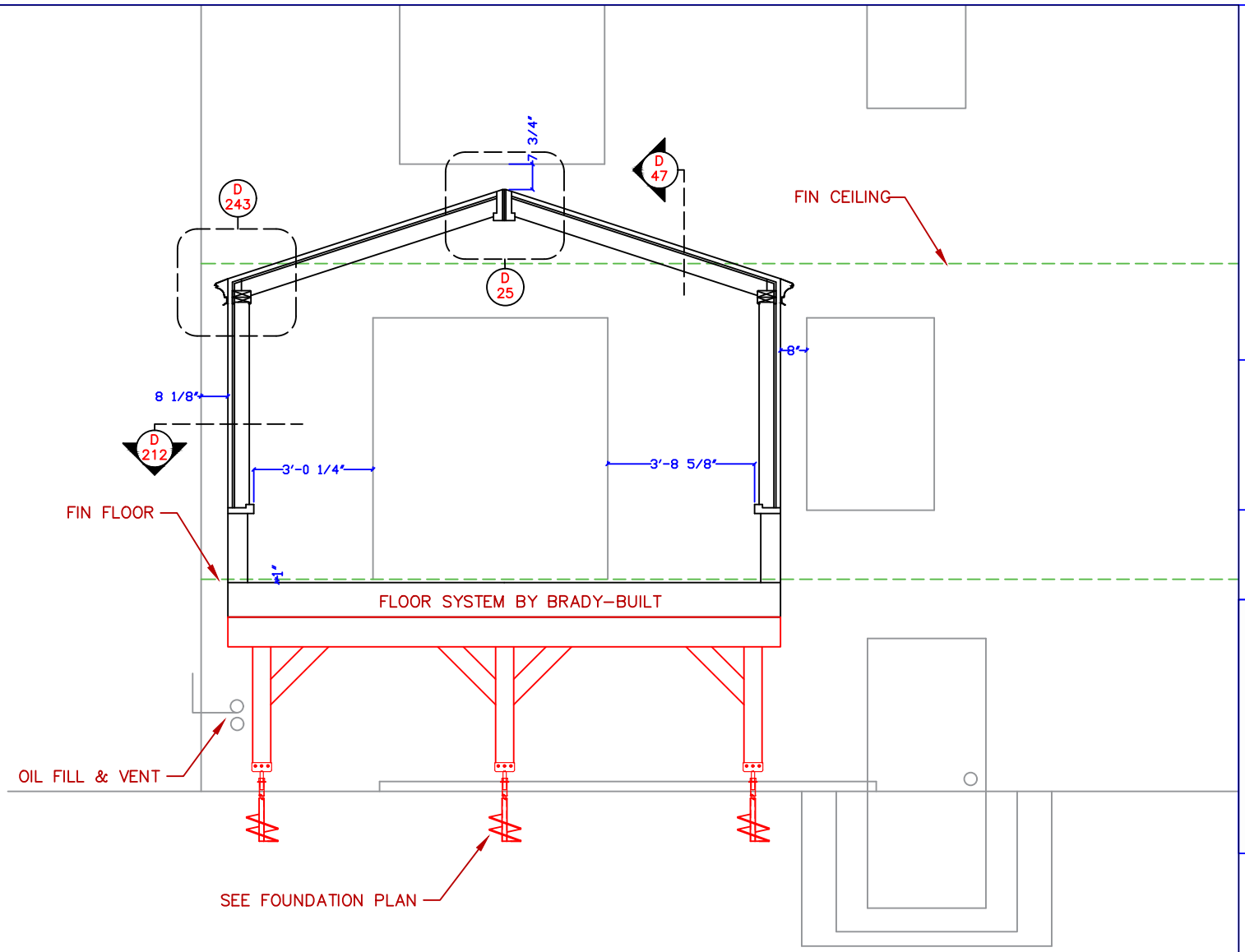

North Elevation with Overlays

CUSTOMER SIGNATURE DATE

Revision 1	6-3-20
Rev 2 update	6-24-20

Sheet 9 of 20

Chris Harrison
Carolyn Murray
121 High Street
Hingham, MA 02043

Drawn:	MG
Date:	6-3-20
Scale:	1/4"=1'-0"
DLn	

Brady-Built SUNROOMS

160 Southbridge St.
Auburn, MA 01501
Tel: 508-798-2600
Fax: 508-798-3034
www.sunroomsbybrady.com

Confidential, Brady-Built Inc.

Sheet 10 of 20	7-26-20	Permit Set				

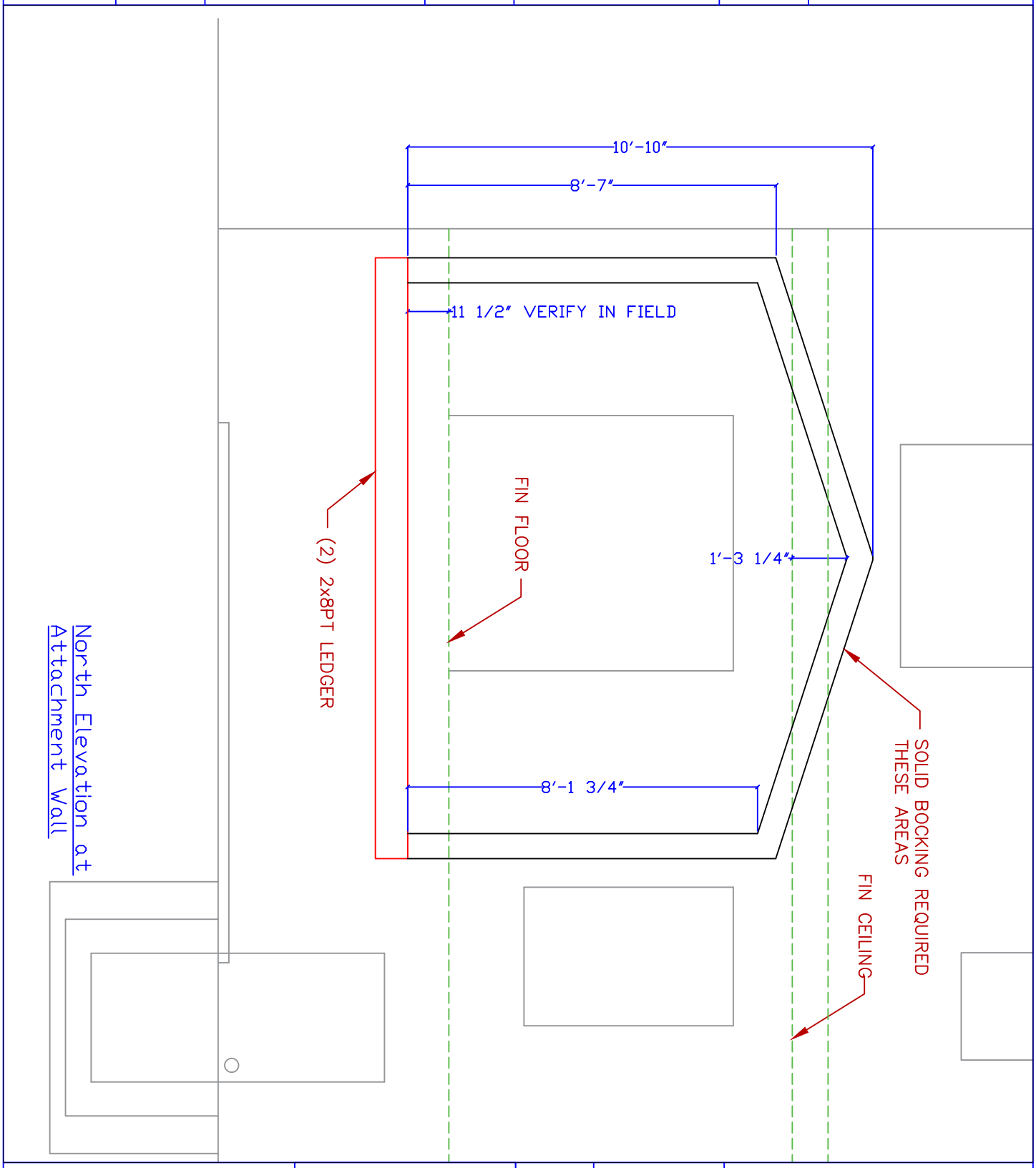

160 Southbridge St.
Auburn, MA 01501
Tel: 508-798-2600
Fax: 508-798-3034
www.sunroomsbybrady.com

Brady-Built SUNROOMS

Drawn:	MG
Date:	7-26-20
Scale:	5/16"=1'-0"

Blocking

Chris Harrison
Carolyn Murray
121 High Street
Hingham, MA 02043

Confidential, Brady-Built Inc.

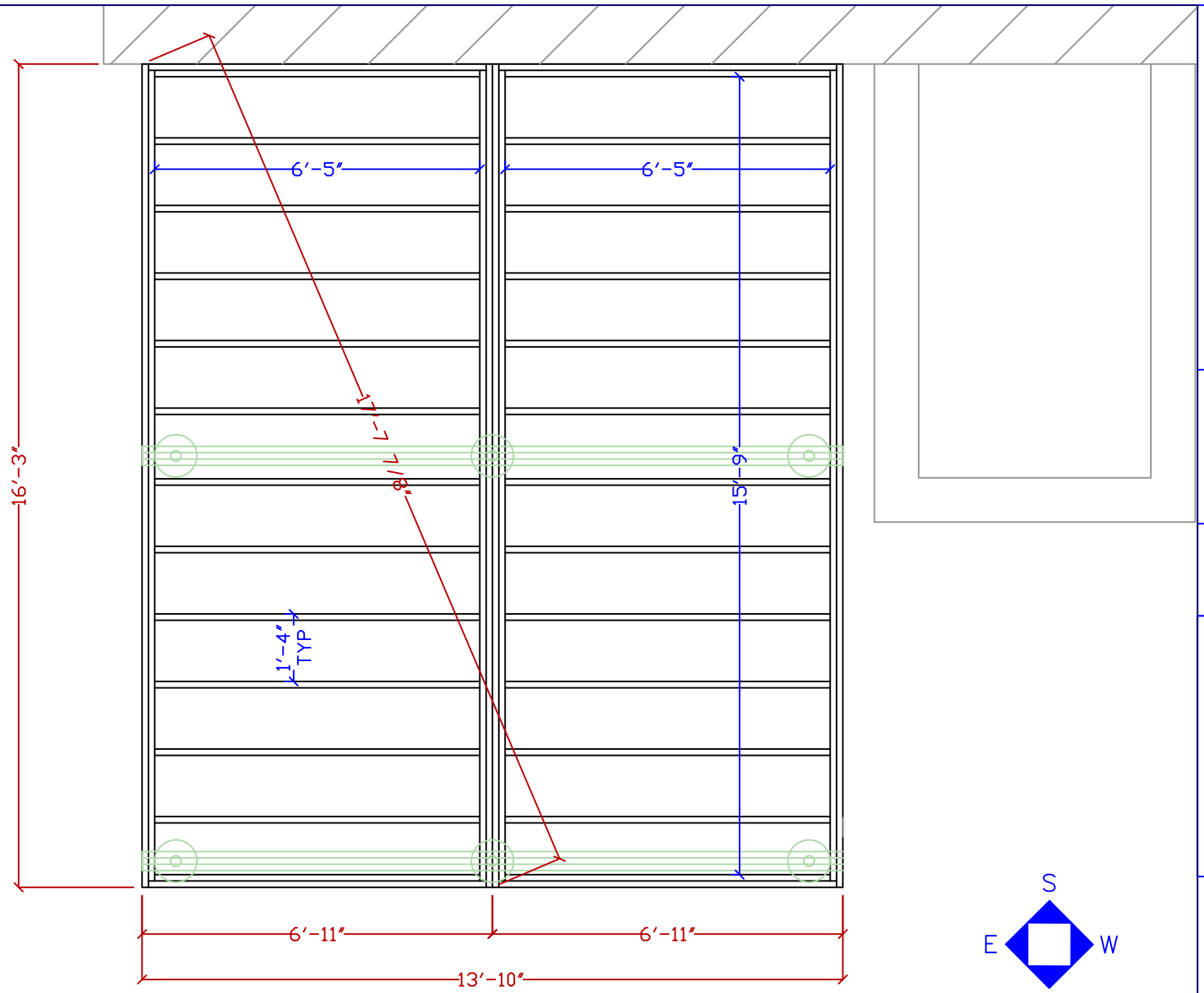

Notes:

Mid-span blocking all bays

All joists 2x10 KD @ 16" OC
3/4" CDX plywood sub floor (screwed for site access)
R-30 Faced batt Fiberglass Insulation
1/2" PT plywood bottom closure

Plan View at Floor Frame

Chris Harrison
Carolyn Murray
121 High Street
Hingham, MA 02043

Drawn:	MG
Date:	7-26-20
Scale:	5/16"=1'-0"

Floor

Confidential, Brady-Built Inc.

Brady-Built SUNROOMS
160 Southbridge St.
Auburn, MA 01501
Tel: 508-798-2600
Fax: 508-798-3034
www.sunroomsbybrady.com

Permit Set
7-26-20

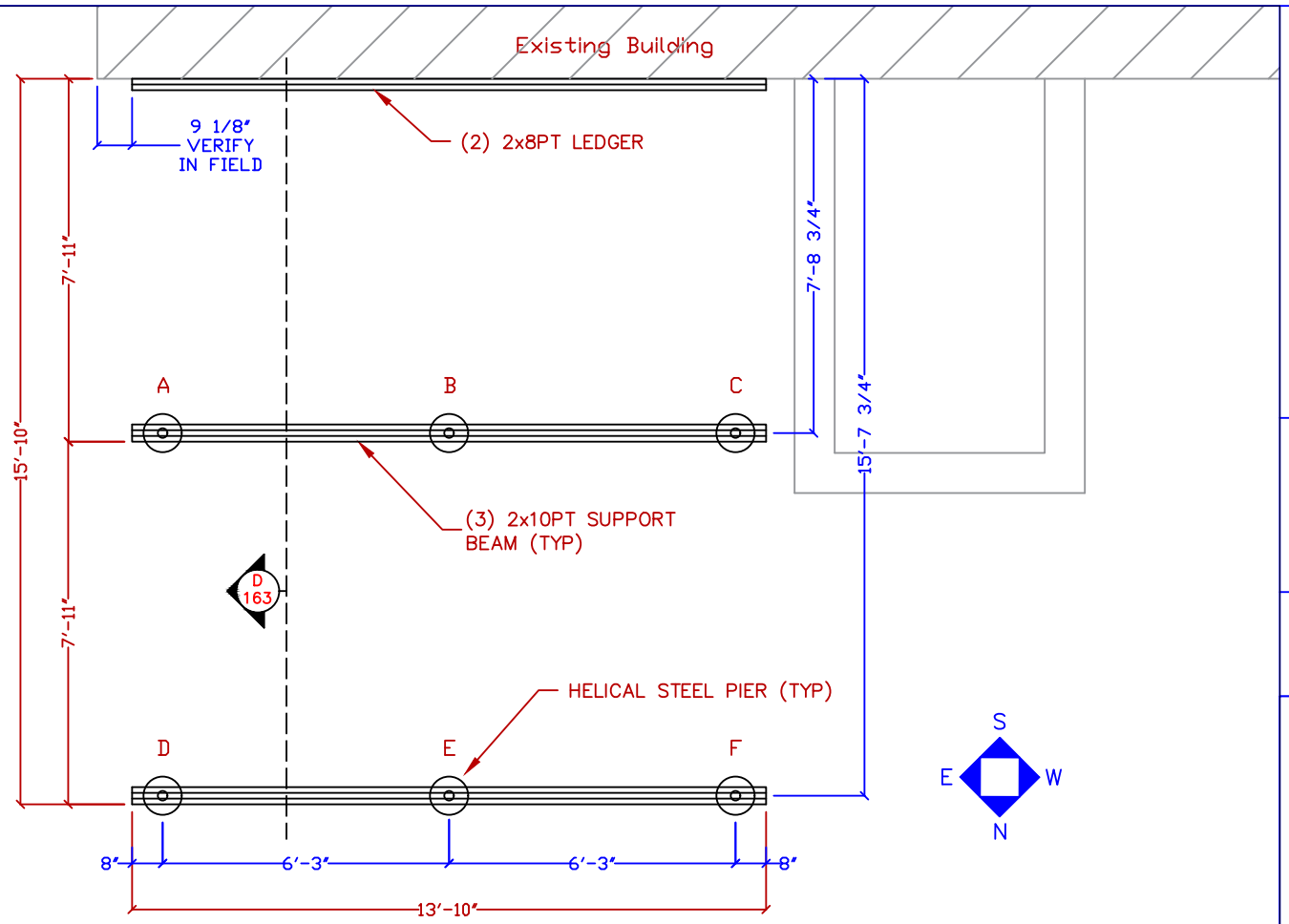

Notes:

All work shown on this drawing by others

Measure from face of house sheathing not face of foundation

Helical screw at each pier location to be sized to adequately support a minimum imposed load value shown as per TABLE 1

Ledger & Beams must be leveled at full span within 1/4" tolerance, squared within 1" tolerance

Install temporary bracing to stabilize beams during installation

Landing, stair & support designed by others

TABLE 1: MINIMUM LOAD BEARING OF HELICAL PIERS

PIER	MINIMUM LOAD (lbs)
A	3000#
B	4800#
C	3000#
D	3000#
E	4000#
F	3000#

Plan View at Foundation

Chris Harrison
Carolyn Murray
121 High Street
Hingham, MA 02043

Drawn: MG
Date: 7-26-20
Scale: 1/4"=1'-0"

Foundation

Confidential, Brady-Built Inc.

Brady-Built
SUNROOMS
160 Southbridge St.
Auburn, MA 01501
Tel: 508-798-2600
Fax: 508-798-3034
www.sunroomsbybrady.com

7-26-20 Permit Set

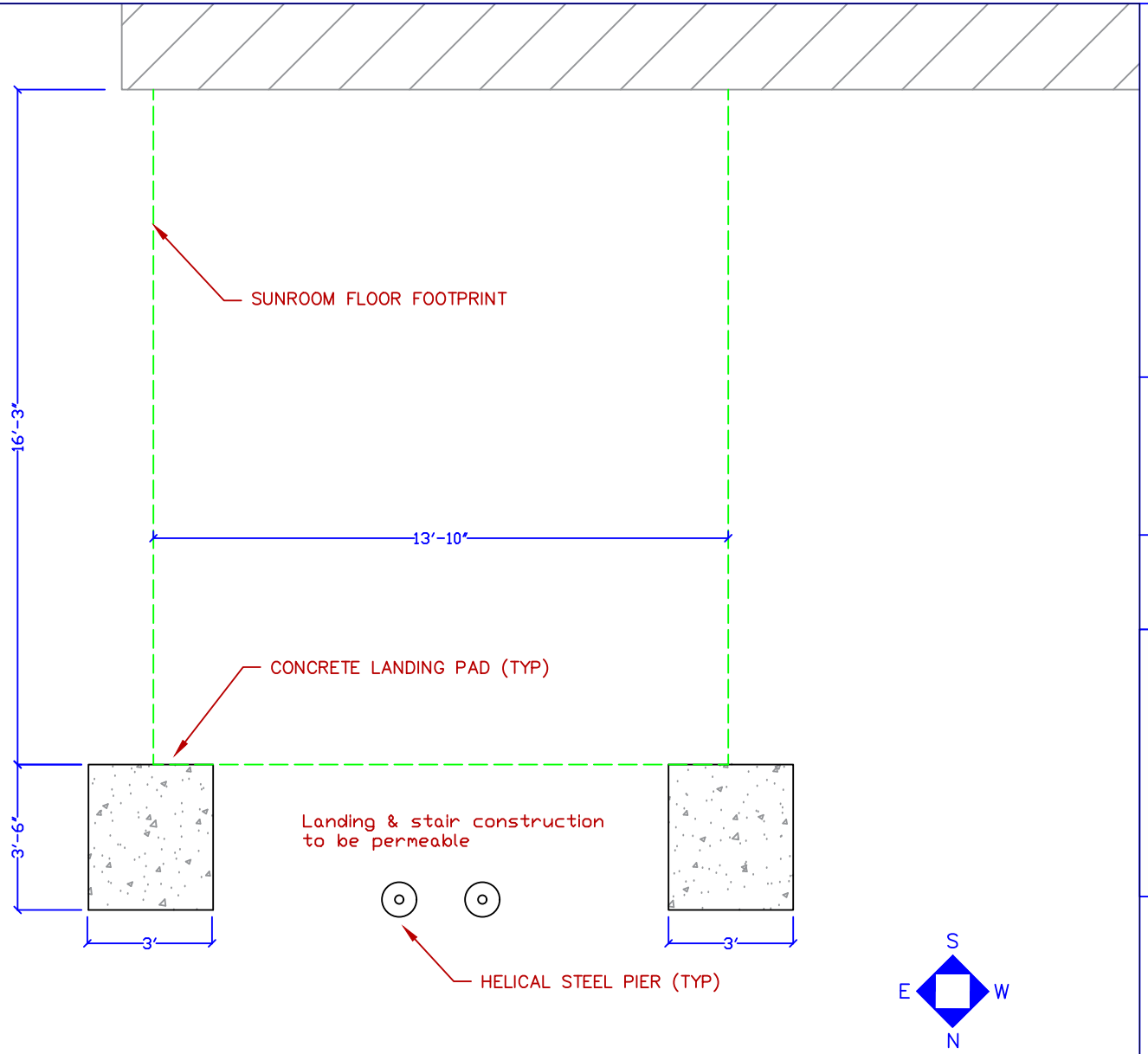

Notes:

All work shown on this drawing by others

Measure from face of house sheathing not face of foundation

Landings, stairs & support designed by others

Plan View at Grade

Drawn:	MG
Date:	7-26-20
Scale:	1/4"=1'-0"
Grade	

Chris Harrison
Carolyn Murray
121 High Street
Hingham, MA 02043

Brady-Built SUNROOMS

160 Southbridge St.
Auburn, MA 01501
Tel: 508-798-2600
Fax: 508-798-3034
www.sunroomsbybrady.com

Confidential, Brady-Built Inc.

7-26-20	Permit Set

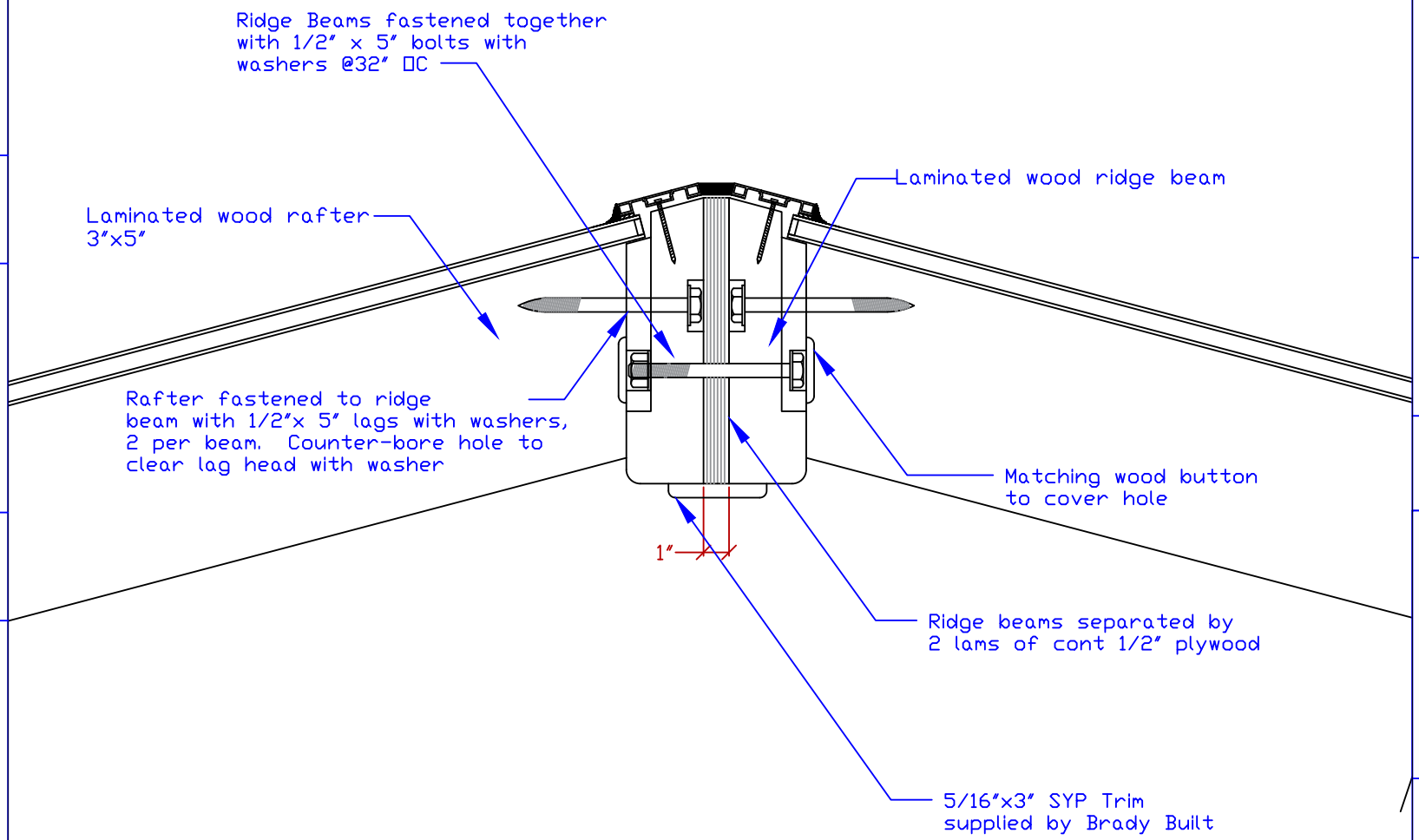

D-25
Section at Ridge Beam Connections

Sheet
14 of 20

7-26-20	Permit Set

Chris Harrison
Carolyn Murray
121 High Street
Hingham, MA 02043

Drawn:	MG
Date:	7-26-20
Scale:	NTS
D25	

Confidential, Brady-Built Inc.

Brady-Built
SUNROOMS
160 Southbridge St.
Auburn, MA 01501
Tel: 508-798-2600
Fax: 508-798-3034
www.sunroomsbybrady.com

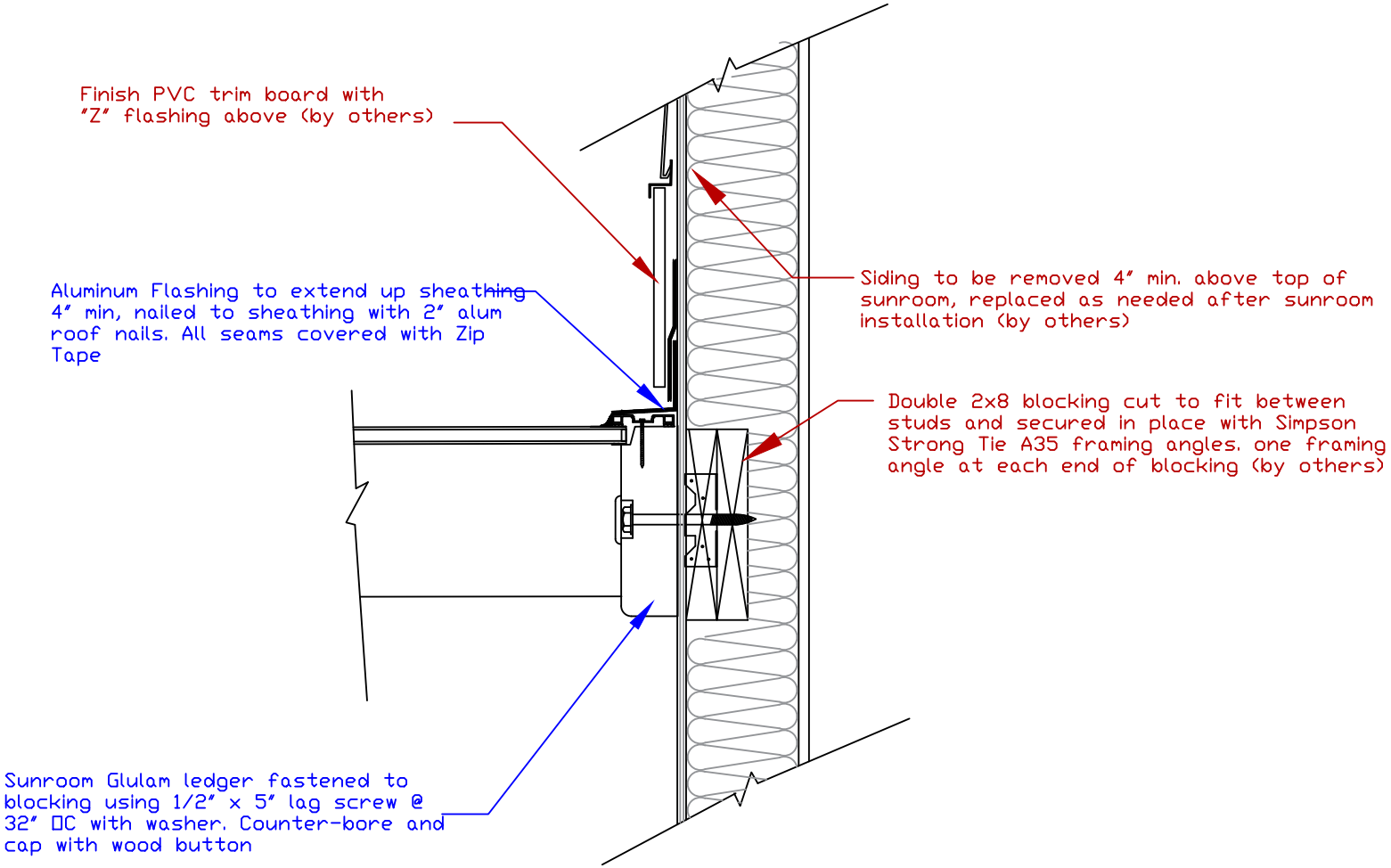

D-47
Section at Roof Connection

Sheet 15 of 20

7-26-20 Permit Set

Chris Harrison
Carolyn Murray
121 High Street
Hingham, MA 02043

Drawn: MG
Date: 7-26-20
Scale: NTS
D47

Brady-Built SUNROOMS

160 Southbridge St.
Auburn, MA 01501
Tel: 508-798-2600
Fax: 508-798-3034
www.sunroomsbybrady.com

Confidential, Brady-Built Inc.

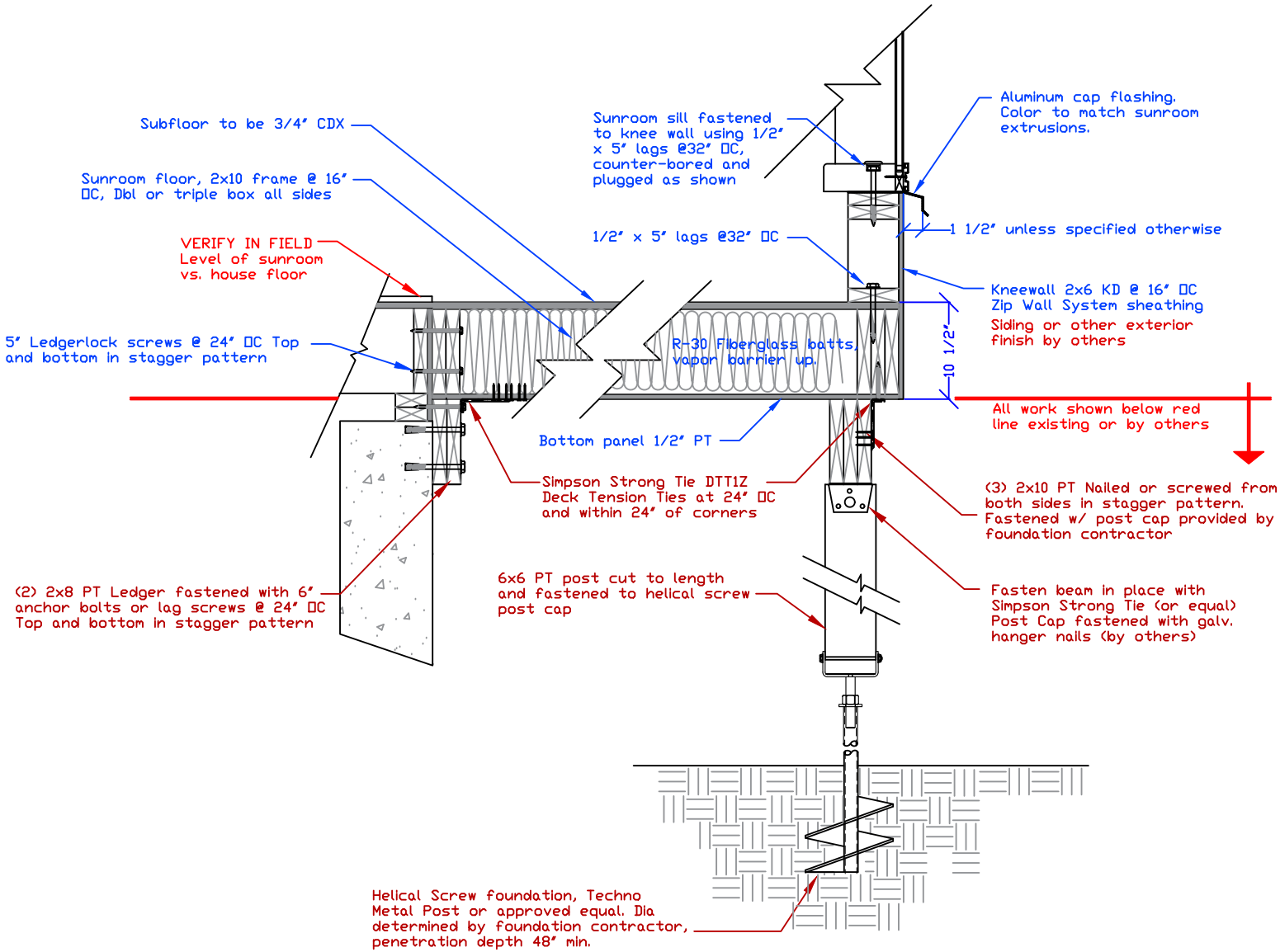

D-163
Section at Foundation-Floor Connections

Sheet 16 of 20

7-26-20 Permit Set

Chris Harrison
Carolyn Murray
121 High Street
Hingham, MA 02043

Drawn: MG
Date: 7-26-20
Scale: NTS
D163

Confidential, Brady-Built Inc.

Brady-Built SUNROOMS

160 Southbridge St.
Auburn, MA 01501
Tel: 508-798-2600
Fax: 508-798-3034
www.sunroomsbybrady.com

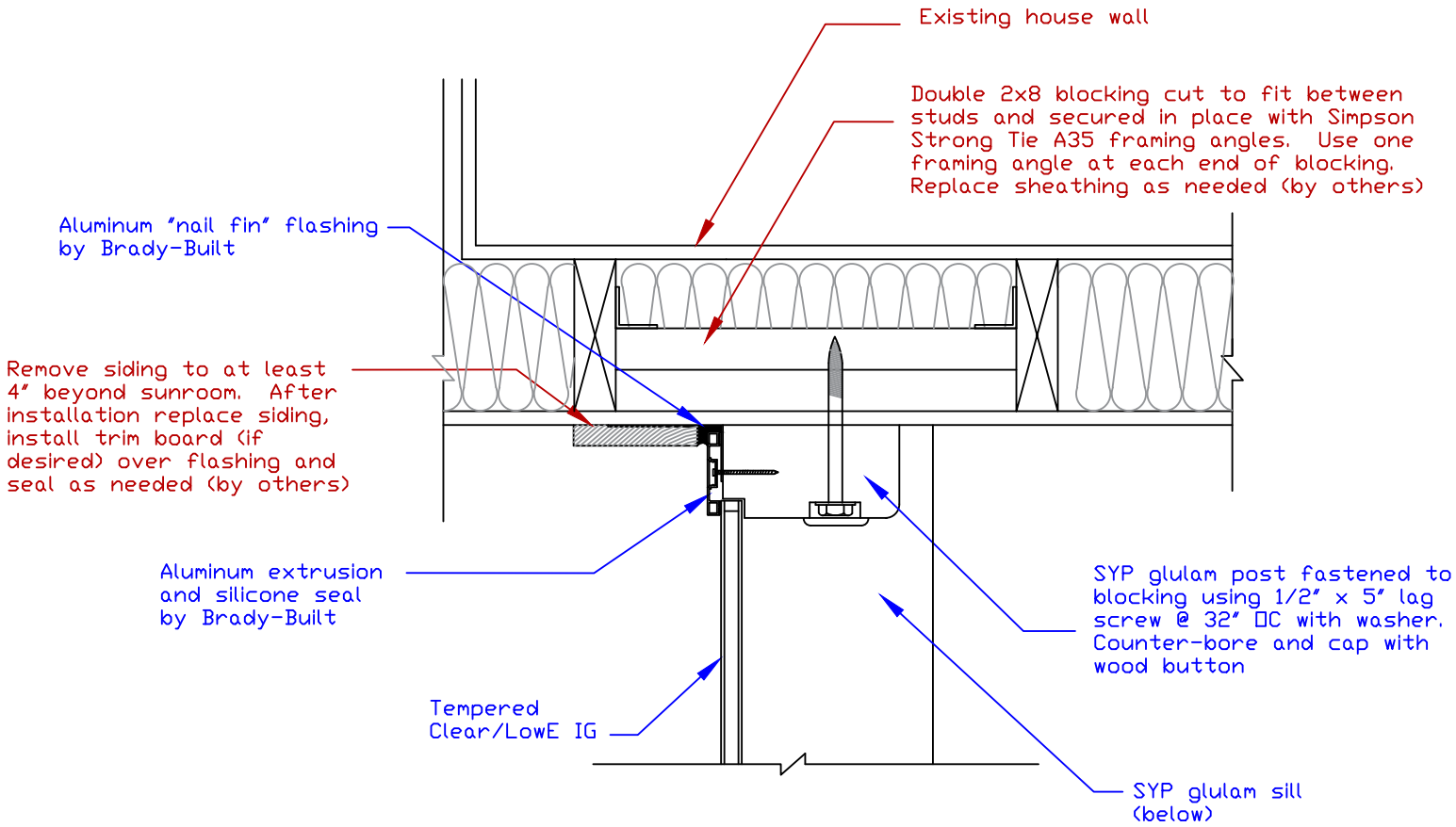

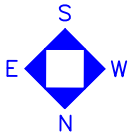

D-212
Plan Section at Endwall Connection

Sheet 17 of 20

7-26-20 Permit Set

Chris Harrison
Carolyn Murray
121 High Street
Hingham, MA 02043

Drawn: MG
Date: 7-26-20
Scale: NTS
D212

Confidential, Brady-Built Inc.

Brady-Built SUNROOMS

160 Southbridge St.
Auburn, MA 01501
Tel: 508-798-2600
Fax: 508-798-3034
www.sunroomsbybrady.com

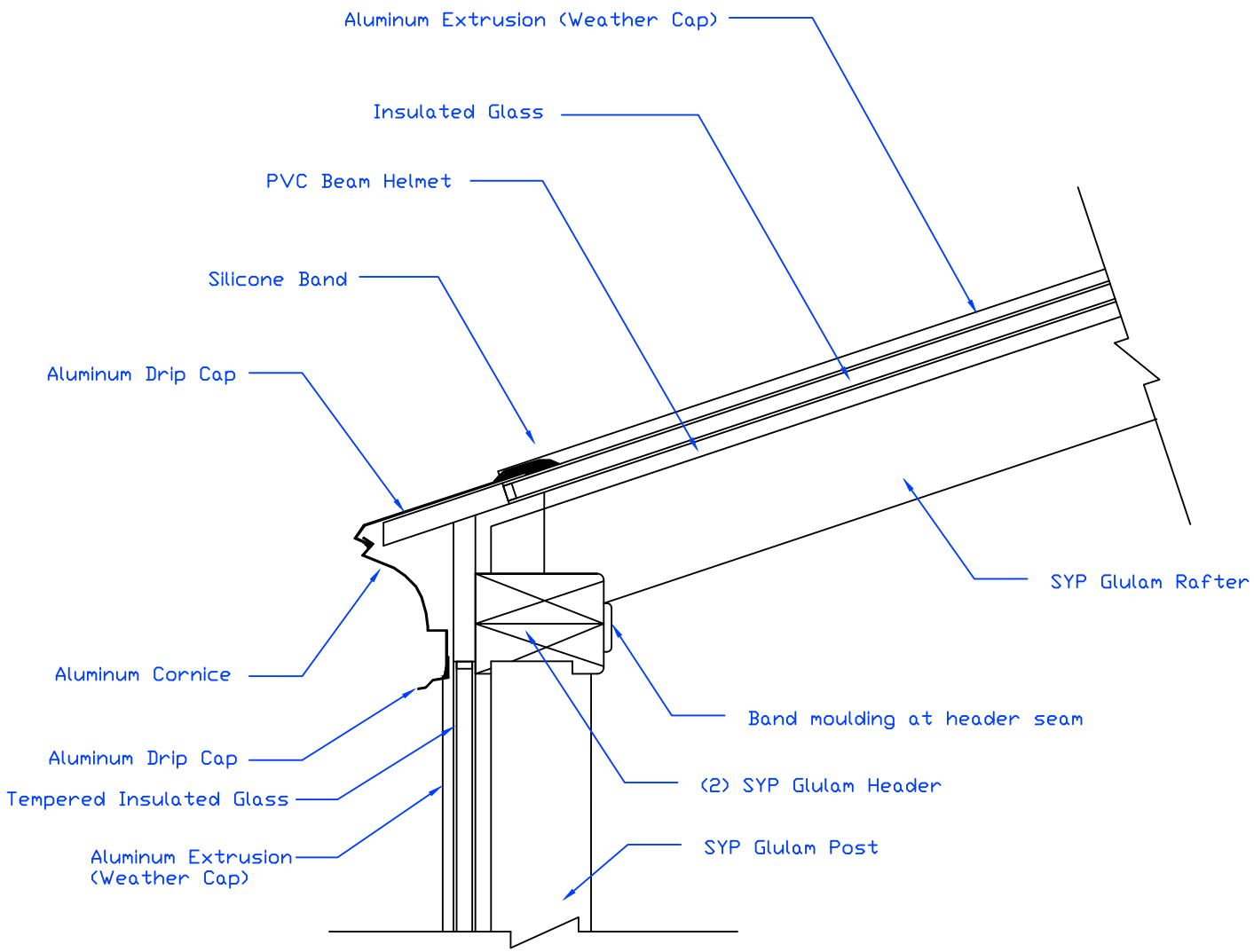

CUSTOMER SIGNATURE DATE

D-243
Section at Sunroom Eave

Chris Harrison
Carolyn Murray
121 High Street
Hingham, MA 02043

Drawn:	MG
Date:	6-24-20
Scale:	NTS
D243	

Brady-Built SUNROOMS

160 Southbridge St.
Auburn, MA 01501
Tel: 508-798-2600
Fax: 508-798-3034
www.sunroomsbybrady.com

Confidential, Brady-Built Inc.

6-24-20 Rev 2 update

GENERAL SPECIFICATIONS:

All structural frame components with mortise & tenon joinery and fastened mechanically using ½"x5" lag screws w/ washers

All Fixed Glass Units Dual Seal w/ 7/8" Overall thickness unless specified otherwise

Exterior Weather Cap to be Aluminum extrusion 6063 Alloy/ T5 Temper with color matched Duracron finish

Standard Flashing shapes to be Aluminum .040 with color matched Duracron finish

GLULAM BEAM SPECIFICATIONS:

Moisture Content < 16%
Laminations t=1/4"
Southern Yellow Pine 24F-V3 SP/SP
(AITC Manual)
Fb = 2400 psi
Fv = 200 psi
E = 1,800,000 psi

Fc (perp to grain) = 650 psi
Fc (par to grain) = 1700 psi
Ft (par to grain) = 1150 psi
Eaxial = 1,600,000 psi
K = 20.6

COMPLIANCE STATEMENT:

As per R301.2.1.1.1: This addition is categorized as a CATEGORY V SUNROOM (conditioned, not thermally isolated.) Sunroom fenestrations conform to AAMA/NPEA/NSA 2100

OTHER NOTES & SPECIFICATIONS:

Exterior Aluminum Color: WHITE
Interior Wood Finish: PAINT *

* Interior paint color:

BENJAMIN MOORE OC-63 "WINTER SNOW"
SEMI-GLOSS FINISH

GLASS AND GLAZING COMPONENTS:

Front & Endwalls: Fixed Insulated Glass
Clear/LowE Tempered

Roof: Fixed Insulated Glass
Bronze/LowE Tempered

FRAMING/STRUCTURAL COMPONENTS:

Kneewall: 2x6 KD @ 16" OC
7/16" Zip System Sheathing
Unfinished Interior
(Insulation and Sheetrock by others)

Floor System: 2x10 KD @ 16" OC
3/4" CDX plywood sub floor
R-30 Faced batt Fiberglass Insulation
1/2" PT plywood bottom closure

DOORS:

Sliding Patio Door 71.25"x79.5"
Pella Impervia Series - Fiberglass Composite
Clear/LowE Tempered Glass
Color Matched Frame, Sash, Hardware
Keyed Lockset
Screen Included

WINDOWS:

Sliding Window 59.5"x59.5"
Pella Impervia Series - Fiberglass Composite
Clear/LowE Tempered Glass
Color Matched Frame, Sash, Hardware
Screen Included

ELECTRICAL COMPONENTS:

▯ = 14-2 Romex Wire & Duplex Box for electrical plug

◔ = 14-2 Romex Wire & Exterior Box for light

◕ = 14-3 Romex Wire for ceiling fan/light

All wires with 25' whip from exit point unless specified otherwise

ALL FIXTURES & FINAL WIRING BY OTHERS

CUSTOMER SIGNATURE DATE

General Notes and Legend

Sheet 19 of 20	
6-15-20	Revision 2
6-24-20	Rev 2 update
6-28-20	Door-Window specs
7-2-20	Paint specs

Chris Harrison
Carolyn Murray
121 High Street
Hingham, MA 02043

Drawn: MG
Date: 6-15-20
Scale: NTS
Notes

Brady-Built SUNROOMS
160 Southbridge St.
Auburn, MA 01501
Tel: 508-798-2600
Fax: 508-798-3034
www.sunroomsbybrady.com

Confidential, Brady-Built Inc.

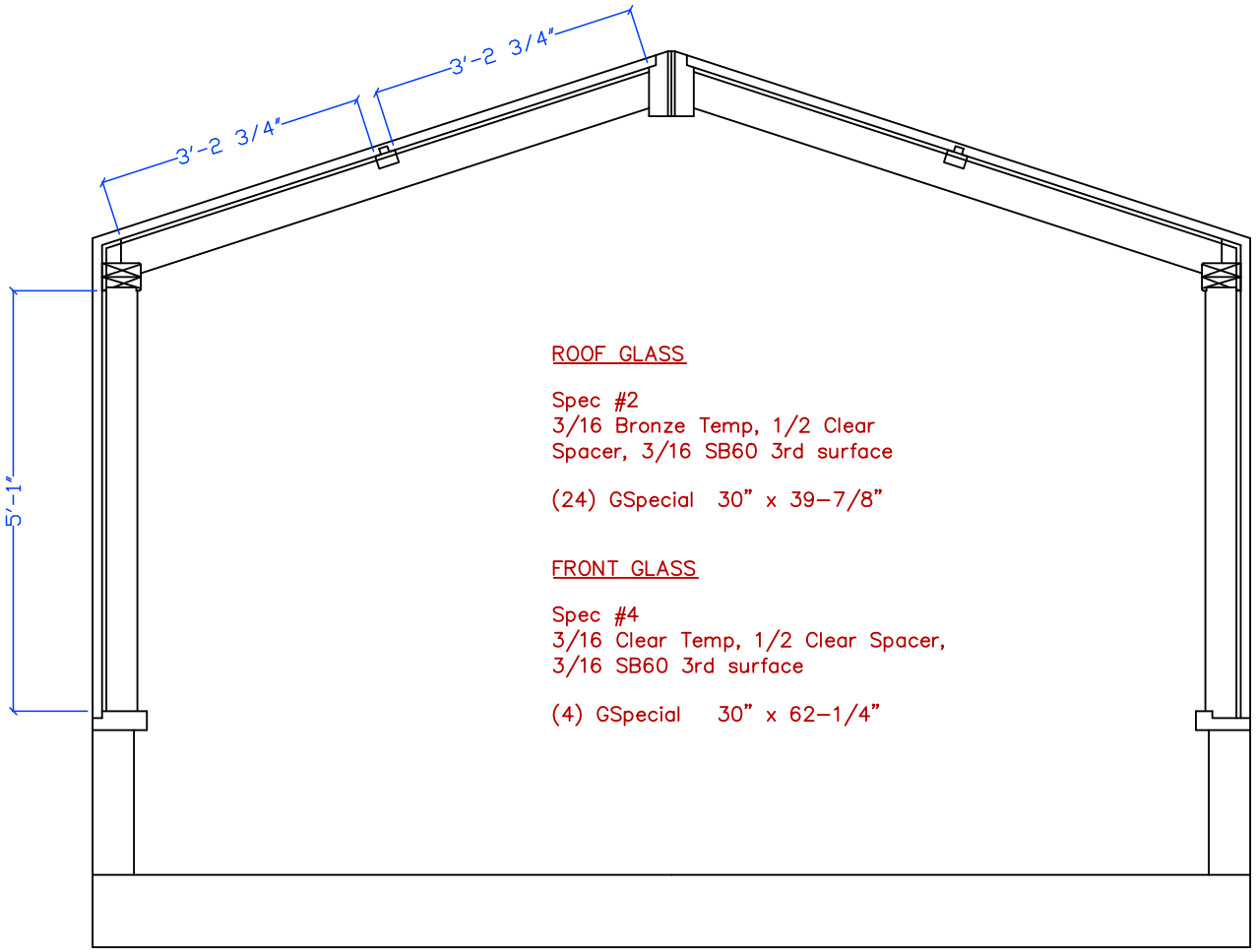

ROOF GLASS

Spec #2
3/16 Bronze Temp, 1/2 Clear
Spacer, 3/16 SB60 3rd surface

(24) GSpecial 30" x 39-7/8"

FRONT GLASS

Spec #4
3/16 Clear Temp, 1/2 Clear Spacer,
3/16 SB60 3rd surface

(4) GSpecial 30" x 62-1/4"

Southwall Framing with
Glass Specs

Chris Harrison
Carolyn Murray
121 High Street
Hingham, MA 02043

Drawn:	MG
Date:	7-17-20
Scale:	7/16"=1'-0"
Glass	

Confidential, Brady-Built Inc.

Brady-Built SUNROOMS
160 Southbridge St.
Auburn, MA 01501
Tel: 508-798-2600
Fax: 508-798-3034
www.sunroomsbybrady.com

7-17-20 Shop Drawing