SITE DEVELOPMENT PLANS

PROPOSED WAREHOUSE FACILITY

FOR

GILL RESEARCH DRIVE LLC.

60 RESEARCH ROAD AND 73 ABINGTON STREET,
HINGHAM, MA 02043

MAP 207 LOT 16
PART OF MAP 213 LOT 30
MAP 211 LOT 1

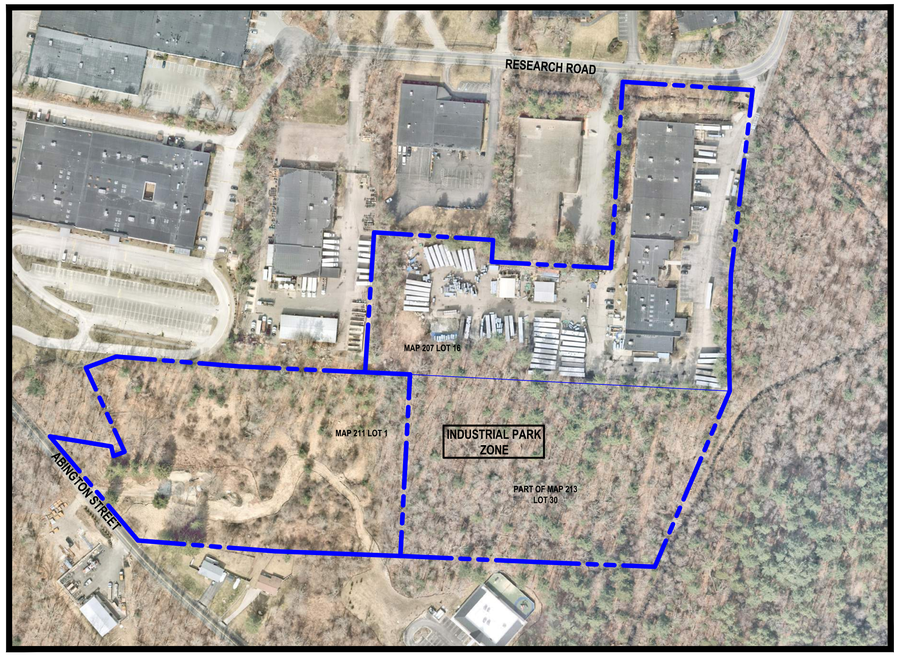

NORTH

AERIAL MAP

SCALE: 1" = 150'

150 75 0 150 300

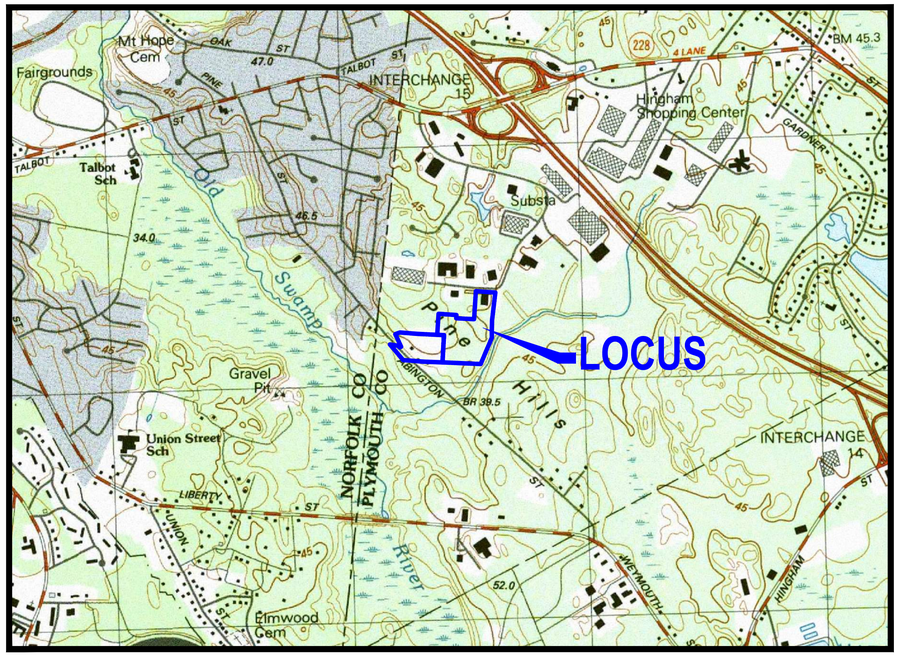

NORTH

USGS MAP

SCALE: 1" = 1,000'

1,000 500 0 1,000 2,000

DRAWING INDEX:

C-0	COVER SHEET
C-1	DEMOLITION PLAN
C-2	OVERALL LAYOUT PLAN
C-2.1	LAYOUT PLAN (SHEET 1 OF 2)
C-2.2	LAYOUT PLAN (SHEET 2 OF 2)
C-3.1	GRADING AND DRAINAGE PLAN (SHEET 1 OF 2)
C-3.2	GRADING AND DRAINAGE PLAN (SHEET 2 OF 2)
C-4.1	UTILITIES PLAN (SHEET 1 OF 2)
C-4.2	UTILITIES PLAN (SHEET 2 OF 2)
C-5	SOIL EROSION AND SEDIMENT CONTROL PLAN
C-6.1	LANDSCAPE PLAN
C-6.2	LANDSCAPE DETAIL SHEET
C-6.3	LIGHTING PLAN
C-7	TEST PIT PLAN
C-8.1	DETAIL SHEET
C-8.2	DETAIL SHEET
C-8.3	DETAIL SHEET
C-8.4	DETAIL SHEET
C-8.5	DETAIL SHEET
C-9	VEHICLE TURNING PLAN EXHIBIT

SUPPLEMENTAL PLANS:

EXISTING CONDITIONS PLAN (SHEET 1 OF 3)
EXISTING CONDITIONS PLAN (SHEET 2 OF 3)
EXISTING CONDITIONS PLAN (SHEET 3 OF 3)
W-1 WATER EXHIBIT PLAN
CA-1 TEMPORARY CONSTRUCTION ACCESS AND LAYDOWN PLAN

APPLICANT:

GILL RESEARCH DRIVE LLC.
60 RESEARCH ROAD,
HINGHAM, MA 02043

SURVEYOR:

CHA CONSULTING, INC.
141 LONGWATER DRIVE-SUITE 104
NORWELL, MA 02061

ENGINEER:

CROCKER DESIGN GROUP, LLC.
2 SHARP STREET, UNIT B,
HINGHAM, MA 02043
781-919-0808

LANDSCAPE ARCHITECT:

CHA CONSULTING, INC.
141 LONGWATER DRIVE-SUITE 104
NORWELL, MA 02061

PERMITTING ATTORNEY:

DROHAN TOCCHIO & MORGAN PC
175 DERBY STREET, SUITE 30
HINGHAM, MA 02043
781-749-7200

Date	Description	No.
	Revisions	
2.23.2021	REVISED PER PEER REVIEW COMMENTS	3
1.29.2021	REVISED PER PEER REVIEW COMMENTS	2
1.04.2021	REVISED PER PEER REVIEW COMMENTS	1

2-23-2021

GABRIEL R. CROCKER
CIVIL
No. 47917
REGISTERED PROFESSIONAL ENGINEER
COMMONWEALTH OF MASSACHUSETTS

GABRIEL R. CROCKER
PROFESSIONAL ENGINEER, MA REGISTRATION #47917

Crocker Design Group
2 SHARP STREET, UNIT B
HINGHAM, MA 02043
P: 781-919-0808

Project
WAREHOUSE BUILDING
60 RESEARCH RD AND 73 ABINGTON STREET, HINGHAM, MA

Prepared for
GILL RESEARCH DRIVE LLC.
60 RESEARCH RD , HINGHAM, MA

Drawing Title
COVER SHEET

Project No.	100-102
Date	10.19.2020
Scale	AS NOTED
Drawn By	AS
Approved By	GC

Drawing No.
C-0

C:\DD\Crocker Design Group, LLC\Gabriel Crocker - Projects\100-102 Hingham - 73 Abington St\dwg\Plot Sheets\Site Plan Application_01 COVER SHEET.dwg, C-0 COVER, Feb 23, 2021 21:46

GENERAL NOTES:

1) PROTECTIONS

A.) PROVIDE PROTECTION NECESSARY TO PREVENT DAMAGE TO EXISTING IMPROVEMENTS, TREES OR VEGETATION.

B.) PROTECT IMPROVEMENTS ON ADJOINING PROPERTIES AND ON OWNER'S PROPERTY. NO WORK PROPOSED OUTSIDE OF PROJECT AND PROPERTY LIMITS.

C.) RESTORE DAMAGED IMPROVEMENTS TO ORIGINAL CONDITION AS ACCEPTABLE TO PARTIES HAVING JURISDICTION.

D.) CONDUCT OPERATIONS TO ENSURE MINIMUM INTERFERENCE WITH OPERATIONS, STREETS, WALKS, AND OTHER ADJACENT FACILITIES. DO NOT CLOSE OR OBSTRUCT STREETS, WALKS, OR OTHER OCCUPIED OR USED FACILITIES WITHOUT PERMISSION FROM AUTHORITIES HAVING JURISDICTION. STREETS AND ROADWAYS SHALL BE THOROUGHLY CLEANED AND/OR SWEPT ON A DAILY BASIS OR MORE FREQUENTLY AS REQUIRED BY THE GOVERNING AUTHORITY.

2.) UNLESS SPECIFIED OTHERWISE ALL MATERIALS AND WORKMANSHIP SHALL BE IN ACCORDANCE WITH THE MASSACHUSETTS HIGHWAY DEPARTMENT SPECIFICATIONS FOR HIGHWAYS AND BRIDGES UNLESS OTHERWISE SPECIFIED HEREIN.

3.) ALL SLOPES, UNLESS OTHERWISE SPECIFIED, SHALL BE LOAMED AND SEEDED FOR STABILIZATION AS SOON AS POSSIBLE TO PREVENT EROSION INTO WETLAND RESOURCE AREAS, ABUTTING PROPERTIES, OR PUBLIC WAYS. EROSION CONTROL BLANKETS ARE REQUIRED FOR ALL 2H:1V SLOPES. SLOPES MAY NOT EXCEED 2H:1V. SEE "SEEDING" NOTE 3. CONTRACTOR SHALL FOLLOW SWPPP REQUIREMENTS. SWPPP TO BE PREPARED IN ADVANCE OF COMMENCEMENT OF CONSTRUCTION BY ENGINEER.

4.) ANY DEVIATIONS, I.E. "FIELD CHANGES" FROM THE DESIGN PLAN(S) MUST BE APPROVED BY THE DESIGN ENGINEER IN WRITING. CONTRACTOR SHOULD BE AWARE THAT LOCAL AND STATE AUTHORITIES HAVE JURISDICTION AND APPROVALS MUST BE OBTAINED FROM THE APPROPRIATE AUTHORITY PRIOR TO THE IMPLEMENTATION OF THE "FIELD CHANGE." CDG ASSUMES NO LIABILITY OR RESPONSIBILITY FOR WORK ASSOCIATED WITH FIELD CHANGES COMPLETED WITHOUT REGARD TO THE "FIELD CHANGE" PROCEDURE.

5.) RELOCATION OF ANY UTILITIES SHALL BE PERFORMED IN ACORDANCE WITH THE PROVISIONS OF THE APPROPRIATE UTILITY COMPANY AND/OR REGULATORY AGENCY.

6.) * * * DIG SAFE NOTE * * *
IN ACCORDANCE WITH MGL. CH. 82, SEC. 40 INCLUDING AMENDMENTS, ALL CONTRACTORS SHALL NOTIFY UTILITY COMPANIES AND GOVERNMENT AGENCIES, IN WRITING, OF THE INTENT TO EXCAVATE, BLAST, DEMOLISH, BORE, OR PERFORM OTHER EARTH MOVING OPERATIONS NO LESS THAN 72 HOURS AND NO MORE THAN 30 DAYS PRIOR TO THE COMMENCEMENT OF SUCH WORK (EXCLUSIVE OF SATURDAYS, SUNDAYS, AND LEGAL HOLIDAYS) OR CALL "DIG SAFE" AT 1-888-DIG-SAFE.

CONTINUATION OF GENERAL NOTES

7.) LOCATION OF UNDERGROUND UTILITIES ON THIS PLAN ARE APPROXIMATE ONLY AND ARE BASED ON A COMBINATION OF ACTUAL FIELD LOCATIONS OF VISIBLE STRUCTURES AND RECORD PLAN COMPILATIONS. EXISTING UTILITY LOCATIONS AND ELEVATIONS SHOWN SHALL BE VERIFIED BY CONTRACTOR PRIOR TO CONSTRUCTION. TEST PITS SHALL BE PERFORMED BY CONTRACTOR PRIOR TO CONSTRUCTION. THE CONTRACTOR SHALL INFORM THE DESIGN ENGINEER OF ANY DISCREPANCIES PRIOR TO THE START OF ANY CONSTRUCTION.

8.) USE OF EXPLOSIVES

A.) COMPLY WITH ALL LAWS, RULES AND REGULATIONS OF FEDERAL, STATE, AND LOCAL AUTHORITIES AND INSURERS WHICH GOVERN STORAGE, USE, MANUFACTURE, SALE, HANDLING, TRANSPORTATION, LICENSING, OR OTHER DISPOSITION OF EXPLOSIVES. UTILIZE SPECIAL PRECAUTIONS FOR PROPER USE OF EXPLOSIVES TO PREVENT HARM TO HUMAN LIFE AND DAMAGE TO SURFACE STRUCTURES, ALL UTILITY LINES OR OTHER SUBSURFACE STRUCTURES. DO NOT CONDUCT BLASTING OPERATIONS UNTIL PERSONS IN VICINITY HAVE HAD AMPLE NOTICE AND HAVE REACHED POSITIONS OF SAFETY.

B.) BLASTING OF ANY ROCK SHALL REQUIRE APPROPRIATE APPROVALS FROM THE LOCAL FIRE DEPARTMENT, PLANNING BOARD, BUILDING INSPECTOR AND OTHER PERTINENT AGENCIES, PRIOR TO COMMENCEMENT OF WORK. ALL BLASTED ROCK OR OTHER EXCESS MATERIALS MUST BE REMOVED FROM THE SITE AND DISPOSED OF AT THE EXPENSE OF THE CONTRACTOR.

9.) ADDITIONAL BENCHMARKS TO BE SET BY CONTRACTOR PRIOR TO CONSTRUCTION TO ENSURE QUALITY WORKMANSHIP.

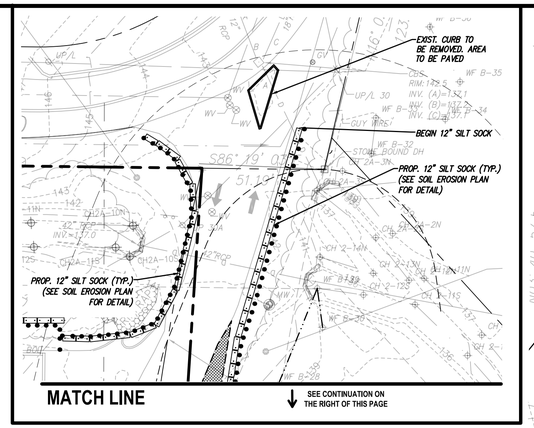

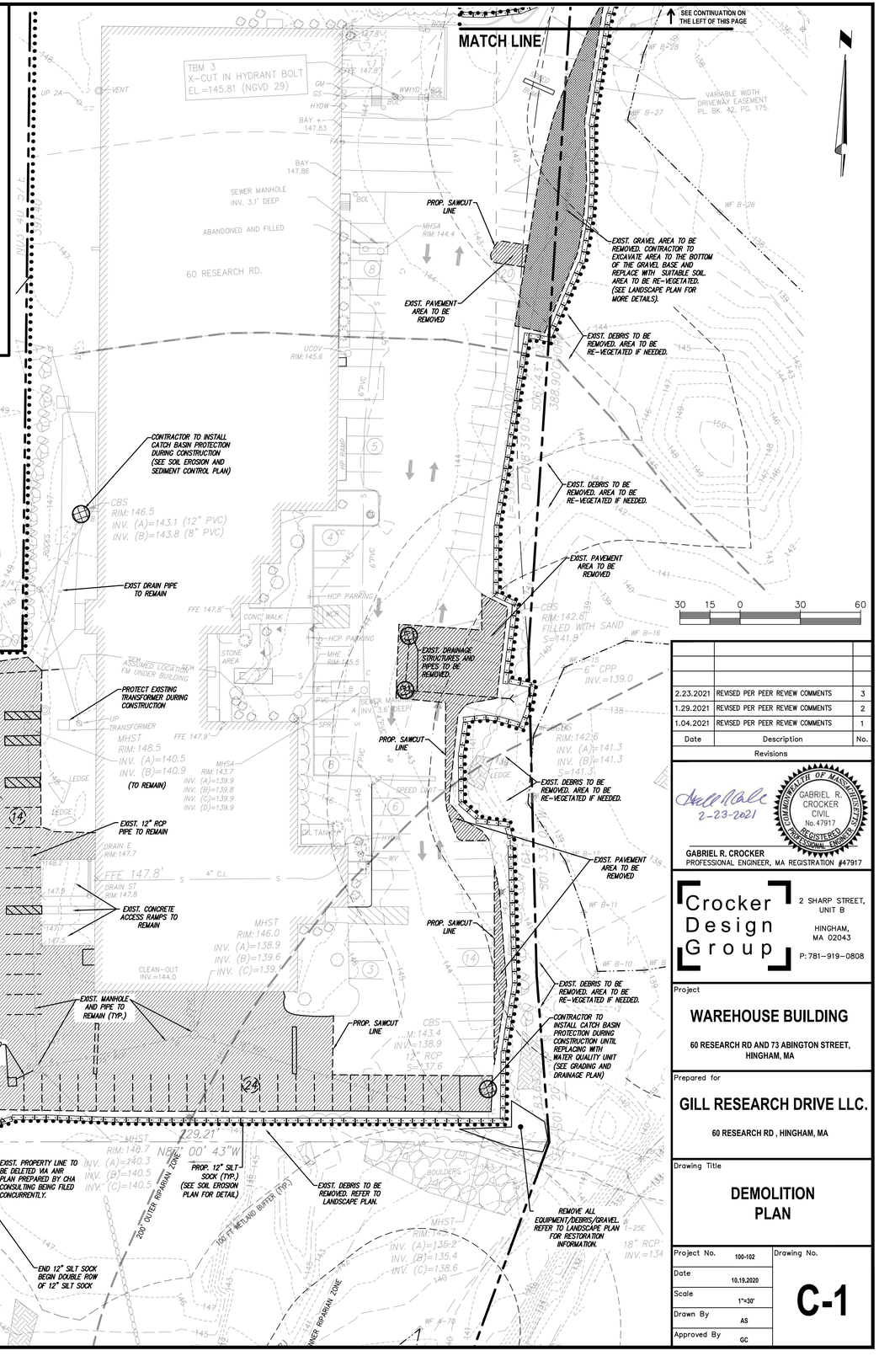

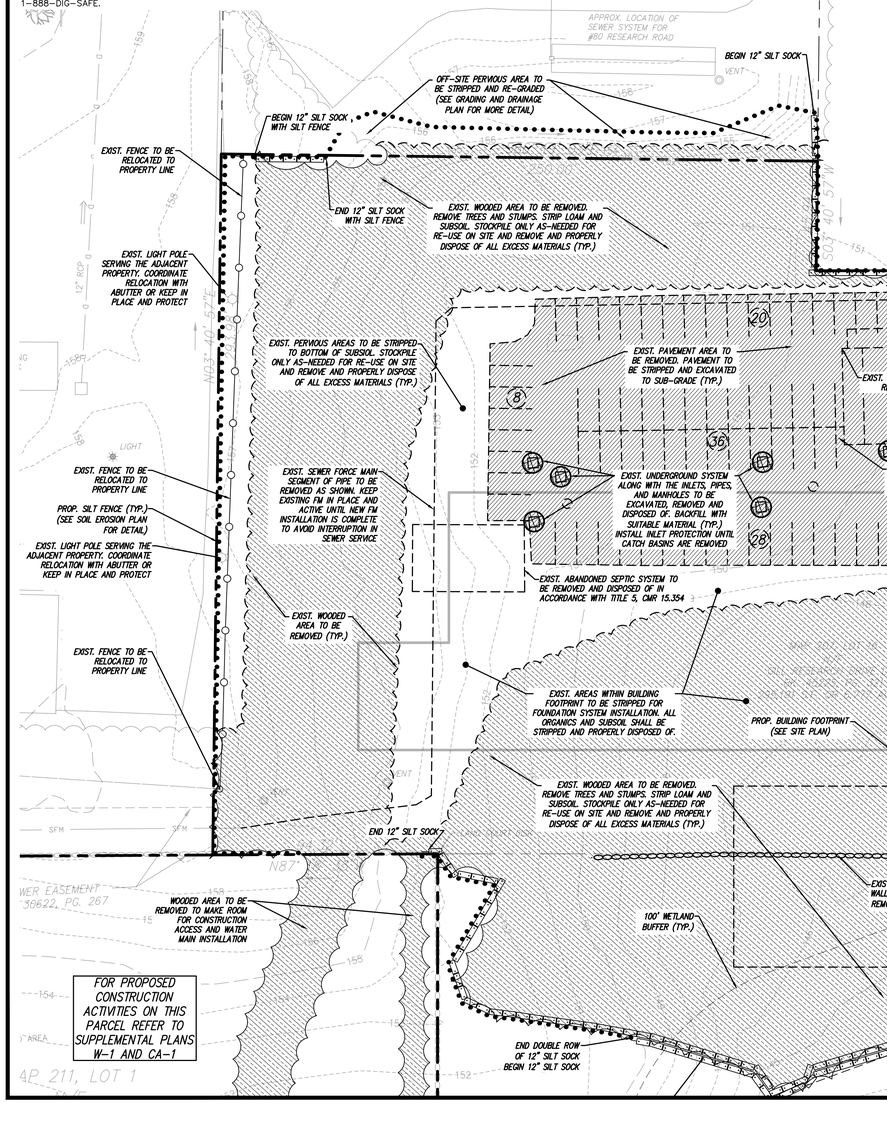

Date	Description	No.
2.23.2021	REVISED PER PEER REVIEW COMMENTS	3
1.29.2021	REVISED PER PEER REVIEW COMMENTS	2
1.04.2021	REVISED PER PEER REVIEW COMMENTS	1

Revisions

2-23-2021

COMMONWEALTH OF MASSACHUSETTS — GABRIEL R. CROCKER — CIVIL — No. 47917 — REGISTERED PROFESSIONAL ENGINEER

GABRIEL R. CROCKER
PROFESSIONAL ENGINEER, MA REGISTRATION #47917

Crocker Design Group
2 SHARP STREET, UNIT B
HINGHAM, MA 02043
P: 781-919-0808

Project

WAREHOUSE BUILDING

60 RESEARCH RD AND 73 ABINGTON STREET, HINGHAM, MA

Prepared for

GILL RESEARCH DRIVE LLC.

60 RESEARCH RD , HINGHAM, MA

Drawing Title

DEMOLITION PLAN

Project No.	100-102
Date	10.19.2020
Scale	1"=30'
Drawn By	AS
Approved By	GC

Drawing No. **C-1**

C:\CDG\Crocker Design Group, LLC\Gabriel Crocker - Projects\100-102 73 Abington (Warren) and Sheehy\Site Plan Application\02 DEMO PLAN.dwg, C-1 DEMO, Feb 23, 2021 21:49

ZONING TABLE:

ZONING DISTRICT: INDUSTRIAL PARK
OVERLAY DISTRICT: SOUTH HINGHAM DEVELOPMENT OVERLAY DISTRICT
(ALSO SUBJECT TO SECTION IV-B SPECIAL REQUIREMENTS TO SCHEDULE OF DIMENSION REQUIREMENTS)
PROPOSED USE: WAREHOUSING / LIGHT INDUSTRIAL / MANUFACTURING

REQUIREMENT	REQUIRED	EXISTING	PROPOSED
MINIMUM LOT AREA (SF)	2 AC (87,120 SF)	295,191 SF (6.777 AC)	523,263 SF (12.01 AC)
MINIMUM FRONTAGE (FT)	250'	272'	272'
MINIMUM FRONT YARD (FT)	35'	80.1'	80.1' (EXIST. BLDG) 484.1' (PROP. BLDG)
MINIMUM SIDE YARD (FT)	35'	31'	31' (EXIST. BLDG) 43.1' (PROP. BLDG)
MINIMUM REAR YARD (FT)	50'	75'	452' (EXIST. BLDG) 422.4' (PROP. BLDG)
MAX. BLDG. HEIGHT	48' (4 STORIES)	2 STORIES	<40' (EXIST. BLDG)-2 STORIES 33' (PROP. BLDG)- 1 STORY
MAX. BLDG. COVERAGE	40%	17.4±% (28,240 + 10,750 + 10,800 +1,600=51,390 SF±)	15.3±% (28,240 + 10,750 + 10,800 +30,500=80,290 SF±)
MAX. FLOOR AREA RATIO	0.35 0.45 BY SPECIAL PERMIT	0.19 (28,240 + 10,750 + 7,030 10,800 +1,600=58,420 SF±)	0.16 (28,240 + 10,750 + 7,030 10,800 +30,500=87,320 SF±)
MIN OPEN SPACE (SEE SPECIAL REQ 1.)	15%	±37% (111,390± SF EXIST. OPEN SPACE AREA ON SITE)	±45% (235,700± SF OF EXIST. AND PROP. OPEN SPACE AREA)
PARKING LOT TREES	1 TREE PER 10 SPACES		157 SPACES PROPOSED THUS 16 TREES REQUIRED. 44 TREES PROVIDED

PARKING ANALYSIS:

	REQUIRED	EXISTING	PROPOSED
PARKING	MANUFACTURING: 2 SPACES/ 1,000 SF OF GFA OFFICE: 3.5 SPACES/ 1,000 SF OF GFA WAREHOUSING: 1 SPACE/ 1,000 SF OF GFA	MANUFACTURING (28,240 SF) = 56.5 SPACES REQ. OFFICE (17,780 SF)= 62.3 SPACES REQ. WAREHOUSE (12,400 SF)= 12.4 SPACES REQ. TOTAL SPACES REQUIRED =132 SPACES TOTAL SPACES EXISTING ON SITE =155 SPACES	MANUFACTURING AREA (28,240 SF)=56.5 SPACES REQ. OFFICE AREA (17,780 SF)= 62.3 SPACES REQ. WAREHOUSE (41,300 SF)= 41.3 SPACES REQ. TOTAL SPACES REQUIRED FOR PROPOSED CONDITIONS=161 SPACES TOTAL PARKING SPACES PROPOSED = 157 SPACES (6 ADA SPACES) (A3 WAIVER REQUESTED)

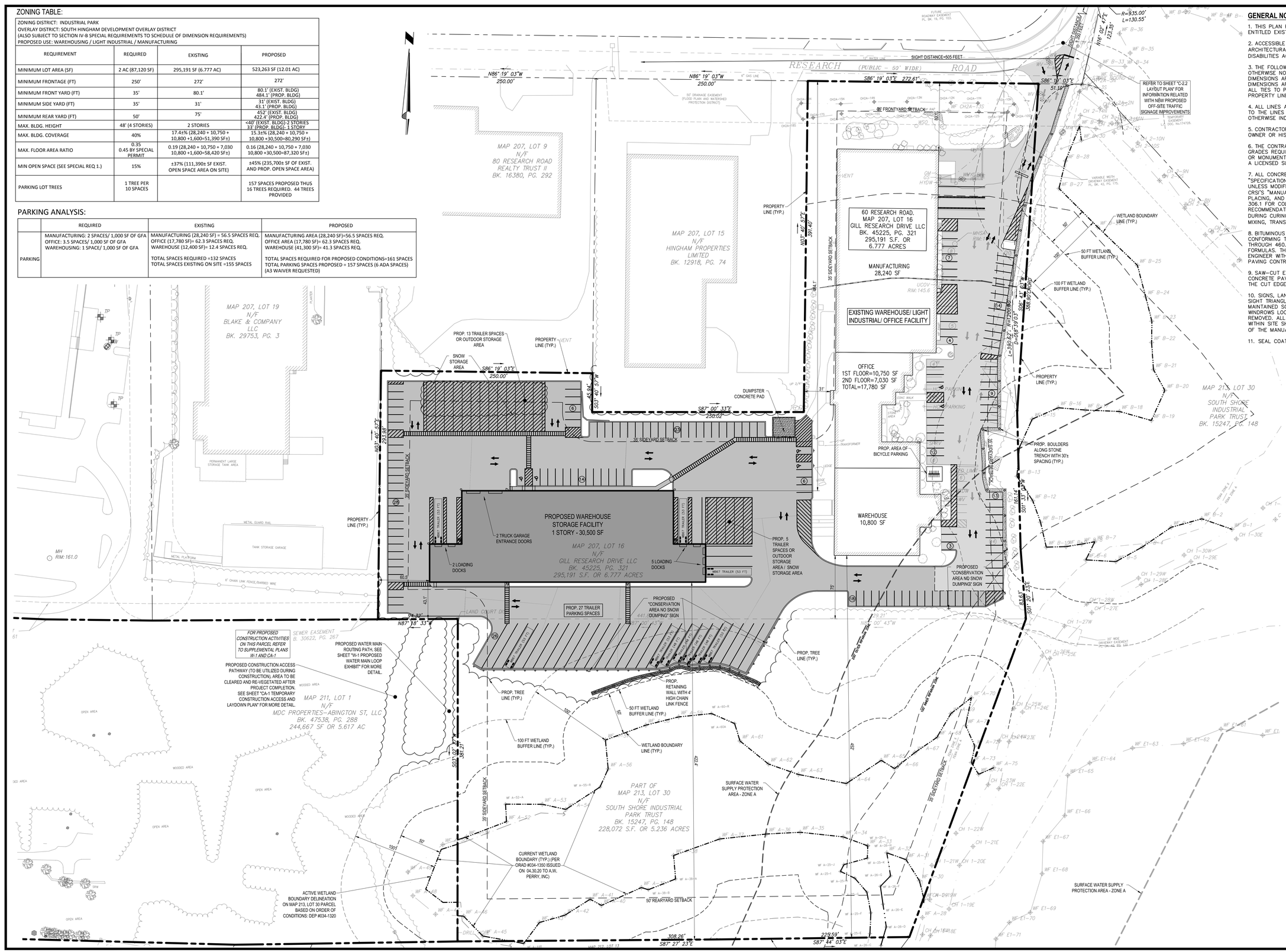
RESEARCH ROAD (PUBLIC - 50' WIDE)
SIGHT DISTANCE=505 FEET
N86° 19' 03"W 250.00'
S86° 19' 03"E 272.61'
S86° 19' 03"E 51.19'
R=935.00' L=130.55'
N16° 02' 47"E 123.35'
REFER TO SHEET "C-2.2 LAYOUT PLAN" FOR INFORMATION RELATED WITH NEW PROPOSED OFF-SITE TRAFFIC SIGNAGE IMPROVEMENTS
MAP 207, LOT 9 N/F 80 RESEARCH ROAD REALTY TRUST II BK. 16380, PG. 292
MAP 207, LOT 15 N/F HINGHAM PROPERTIES LIMITED BK. 12918, PG. 74
MAP 207, LOT 19 N/F BLAKE & COMPANY LLC BK. 29753, PG. 3
MAP 211, LOT 1 N/F MDC PROPERTIES-ABINGTON ST, LLC BK. 47538, PG. 288 244,667 SF OR 5.617 AC
MAP 213, LOT 30 N/F SOUTH SHORE INDUSTRIAL PARK TRUST BK. 15247, PG. 148
PART OF MAP 213, LOT 30 N/F SOUTH SHORE INDUSTRIAL PARK TRUST BK. 15247, PG. 148 228,072 S.F. OR 5.236 ACRES
60 RESEARCH ROAD. MAP 207, LOT 16 GILL RESEARCH DRIVE LLC BK. 45225, PG. 321 295,191 S.F. OR 6.777 ACRES
EXISTING WAREHOUSE/ LIGHT INDUSTRIAL/ OFFICE FACILITY
MANUFACTURING 28,240 SF
OFFICE 1ST FLOOR=10,750 SF 2ND FLOOR=7,030 SF TOTAL=17,780 SF
PROPOSED WAREHOUSE STORAGE FACILITY 1 STORY - 30,500 SF
MAP 207, LOT 16 N/F GILL RESEARCH DRIVE LLC BK. 45225, PG. 321 295,191 S.F. OR 6.777 ACRES
WAREHOUSE 10,800 SF
PROPERTY LINE (TYP.)
35' FRONTYARD SETBACK
35' SIDEYARD SETBACK
50' REARYARD SETBACK
WETLAND BOUNDARY LINE (TYP.)
50 FT WETLAND BUFFER LINE (TYP.)
100 FT WETLAND BUFFER LINE (TYP.)
PROP. TREE LINE (TYP.)
PROP. 13 TRAILER SPACES OR OUTDOOR STORAGE AREA
SNOW STORAGE AREA
DUMPSTER CONCRETE PAD
PROP. AREA OF BICYCLE PARKING
PROP. BOULDERS ALONG STONE TRENCH WITH 30'± SPACING (TYP.)
2 TRUCK GARAGE ENTRANCE DOORS
2 LOADING DOCKS
5 LOADING DOCKS
PROP. 5 TRAILER SPACES OR OUTDOOR STORAGE AREA / SNOW STORAGE AREA
PROP. 27 TRAILER PARKING SPACES
PROPOSED "CONSERVATION AREA NO SNOW DUMPING" SIGN
PROPOSED "CONSERVATION AREA NO SNOW DUMPING" SIGN
PROP. RETAINING WALL WITH 4' HIGH CHAIN LINK FENCE
SURFACE WATER SUPPLY PROTECTION AREA - ZONE A
CURRENT WETLAND BOUNDARY (TYP.) (PER ORAD #034-1320 ISSUED ON 04.30.20 TO A.W. PERRY, INC)
ACTIVE WETLAND BOUNDARY DELINEATION ON MAP 213, LOT 30 PARCEL BASED ON ORDER OF CONDITIONS: DEP #034-1320
FOR PROPOSED CONSTRUCTION ACTIVITIES ON THIS PARCEL, REFER TO SUPPLEMENTAL PLANS W-1 AND CA-1
PROPOSED CONSTRUCTION ACCESS PATHWAY (TO BE UTILIZED DURING CONSTRUCTION). AREA TO BE CLEARED AND RE-VEGETATED AFTER PROJECT COMPLETION. SEE SHEET "CA-1 TEMPORARY CONSTRUCTION ACCESS AND LAYDOWN PLAN" FOR MORE DETAIL.
PROPOSED WATER MAIN ROUTING PATH. SEE SHEET "W-1 PROPOSED WATER MAIN LOOP EXHIBIT" FOR MORE DETAIL.
SEWER EASEMENT B. 30622, PG. 267
WETLAND BOUNDARY LINE (TYP.)
WETLAND BUFFER LINE (TYP.)
50 FT WETLAND BUFFER LINE (TYP.)
100 FT WETLAND BUFFER LINE (TYP.)
PROPERTY LINE (TYP.)
PROP. TREE LINE (TYP.)
PROP. 5 TRAILER SPACES OR OUTDOOR STORAGE AREA / SNOW STORAGE AREA
PROPOSED "CONSERVATION AREA NO SNOW DUMPING" SIGN
PROP. 27 TRAILER PARKING SPACES
PROP. BOULDERS ALONG STONE TRENCH WITH 30'± SPACING (TYP.)
PROP. AREA OF BICYCLE PARKING
SURFACE WATER SUPPLY PROTECTION AREA - ZONE A
N01° 46' 57"E 391.40'
S01° 46' 57"W 391.40'
N01° 46' 57"E 293.69'
S01° 46' 57"W 45.84'
S01° 46' 57"W 504.21'
S01° 46' 57"W 387.21'
S01° 46' 57"W 388.07'
S01° 46' 57"W 83.63'
S01° 20' 23"E 83.63'
S01° 46' 57"W 504.21'
S01° 20' 23"E 504.21'
S87° 00' 33"E 250.02'
N87° 18' 33"W 94.32'
N87° 00' 43"W 259.21'
S87° 27' 23"E 308.26'
S87° 44' 03"E 295.59'
S86° 47' 03"W 388.07'
L=396.52'
D=0°06'39"
R=2,050.00'
MH RIM: 161.0
UP TRANSFORMER
HMH/T ENTRANCE
MHSA RIM: 160.0
UCOV RIM: 145.6
SIGN
CONC WALK
STEEL BOLLARD
LEDGE
TSL
TOP OF BANK
BOTTOM OF BANK
METAL GUARD RAIL
METAL PLATFORM
TANK STORAGE GARAGE
PERMANENT LARGE STORAGE TANK AREA
6' CHAIN LINK FENCE/BARBED WIRE
WOODED AREA
OPEN AREA
LAND COURT D
VARIABLE WIDTH DRIVEWAY EASEMENT BK. 8864, PG. 133
50' WIDE DRIVEWAY EASEMENT BK. 4242, PG. 133
FUTURE ROADWAY EASEMENT PL. BK. 19, PG. 103
50' DRAINAGE EASEMENT (FLOOD PLAIN AND WATERSHED PROTECTION DISTRICT)
6" GAS LINE
12" WATER LINE
UTILITY EASEMENT EXIST. 12" WATER LINE
TEMPORARY EASEMENT EXIST. 12" WATER LINE
EXIST. DRAINAGE EASEMENT DOC. NO.174728
EXIST. DRAINAGE EASEMENT DOC. NO.174728
50' SIGHT DISTANCE
WSO
WF B-1 WF B-2 WF B-3 WF B-4 WF B-5 WF B-6 WF B-7 WF B-8 WF B-9 WF B-10 WF B-11 WF B-12 WF B-13 WF B-14 WF B-15 WF B-16 WF B-17 WF B-18 WF B-19 WF B-20 WF B-21 WF B-22 WF B-23 WF B-24 WF B-25 WF B-26 WF B-27 WF B-28 WF B-29 WF B-30 WF B-31 WF B-32 WF B-33 WF B-34 WF B-35 WF B-36
WF A-25-I WF A-25-J WF A-25-K WF A-25-L WF A-26-K WF A-26-L WF A-26-M WF A-26-N WF A-26-O WF A-26-P WF A-27-I WF A-27-J WF A-27-K WF A-27-L WF A-28-K WF A-28-L WF A-28-M WF A-28-N WF A-28-O WF A-28-P WF A-29-I WF A-29-J WF A-29-K WF A-29-L WF A-30-K WF A-30-L WF A-30-M WF A-30-N WF A-30-O WF A-30-P WF

SEE SHEET C-2.2 LAYOUT PLAN

MATCH LINE

SEE SHEET C-2.2 LAYOUT PLAN

MATCH LINE

PROPOSED WAREHOUSE STORAGE FACILITY
1 STORY - 30,500 SF

MAP 207, LOT 16
N/F
GILL RESEARCH DRIVE LLC
BK. 45225, PG. 321
295,191 S.F. OR 6.777 ACRES

MAP 211, LOT 1
N/F
MDC PROPERTIES-ABINGTON ST, LLC
BK. 47538, PG. 288
244,667 SF OR 5.617 AC

PART OF
MAP 213, LOT 30
N/F
SOUTH SHORE INDUSTRIAL PARK TRUST
BK. 15247, PG. 148
228,072 S.F. OR 5.236 ACRES

ALL SIGNS AND PAVEMENT MARKINGS TO BE INSTALLED WITHIN THE PROJECT SITE SHALL CONFORM TO THE APPLICABLE SPECIFICATIONS OF THE MANUAL ON UNIFORM TRAFFIC CONTROL DEVICES (MUTCD)

PROP. TEMPORARY GRADING EASEMENT

PROP. TREE LINE (TYP.)

PROP. OUTDOOR STORAGE AREA

PROPERTY LINE (TYP.)

PROP. START OF NEW CHAIN LINK FENCE (TO MATCH EXIST)

SNOW STORAGE AREA

LANDSCAPED AREA

LANDSCAPE WALL (4 FT MAX HEIGHT)

PROP. 2' OVERHANG FOR 18' LONG PARKING SPACES

PROP. CHAIN LINK FENCE (TO MATCH EXIST)

PROP. CAPE COD BERM (TYP.)

PROP. FULL DEPTH PAVEMENT (TYP.)

PROP. WHITE PAINTED STRIPED MARKING (TYP.)

PROP. 5 FT WIDE PAINTED CROSSWALK

PROP. GARAGE DOORS (SEE ARCHITECTURAL PLANS)

6" BOLLARD

PROP. 5' WIDE BITUMINOUS SIDEWALK

PROP. 3 FT LONG BY 5 FT WIDE H-CAP RAMP (TYP.)

PROP. H-CAP STRIPING (TYP.)

PROP. H-CAP SIGN (BLDG. WALL MOUNTED) (TYP.)

PROP. 38'X55' STRIPED LOADING DOCK SPACES (TYP.)

PROP. STRIPED MARKING (TYP.)

RAISED INTERIOR LOADING AREA (SEE ARCHITECTURAL PLANS FOR DETAIL)

INTERIOR RAMP TO LOADING AREA (SEE ARCHITECTURAL PLANS FOR DETAIL)

PROP. CONCRETE PAD AND MAN ACCESS DOOR (TYP.)

PROP. LOADING DOCKS DOORS (TYP.)

PROP. 5 FT WIDE PAINTED CROSSWALK

PROP. 3 FT LONG BY 5 FT WIDE H-CAP RAMP (TYP.)

PROP. 3 LF CURB TAPER (TYP.)

PROP. 5' WIDE BITUMINOUS SIDEWALK

PROP. LANDSCAPE AREA (TYP.)

PROP. PAINTED DIRECTIONAL ARROWS (TYP.)

PROP. FULL DEPTH PAVEMENT (TYP.)

PROPOSED "CONSERVATION AREA NO SNOW DUMPING" SIGN

PROP. 5 FT WIDE PAINTED CROSSWALK

PROP. CAPE COD BERM (TYP.)

PROP. WOODED GUIDE RAIL (TYP.)

PROP. 4 FT HIGH CHAIN LINK FENCE (TYP.)

PROP. 192 LFt OF RETAINING WALL MAX HEIGHT 9 FT

TRAILER PARKING FOR WB-62 , 48 FT LONG TRAILER (4 SPACES)

PROP. 24'X27' DUMPSTER ENCLOSURE

PROP. PAINTED DIRECTIONAL ARROWS (TYP.)

PROP. WHITE PAINTED STRIPED MARKING (TYP.)

PROP. OUTDOOR STORAGE AREA/SNOW STORAGE AREA(TYP.)

PROP. CAPE-COD-BERM. CONSTRUCT THE CURB SO THAT THE TOP OF CURB WILL MATCH FLUSH WITH EXIST CONCRETE RAMP

PROP. 38.5'X55' STRIPED LOADING DOCK SPACES (TYP.)

PROP. FULL DEPTH PAVEMENT (TYP.)

PROP. CAPE COD BERM (TYP.)

PROP. SAWCUT LINE

PROPOSED "CONSERVATION AREA NO SNOW DUMPING" SIGN

EXIST. PAVEMENT TO BE SEAL COATED. PARKING AREAS TQ BE RE-STRIPED (TYP.)

PROP. 2' OVERHANG FOR 18' LONG PARKING SPACES

PROP. H-CAP STRIPING (TYP.)

PROP. LANDSCAPE AREA (TYP.)

PROP. 2' OVERHANG FOR 18' LONG PARKING SPACES

PROP. H-CAP SIGN (TYP.)

PROP. BICYCLE PARKING RACK WITH 5' WIDE LOADING ZONE ON BOTH SIDES

BICYCLE (TYP.)

EXISTING BUILDING (TYP.)

EXISTING CONCRETE ACCESS RAMP TO REMAIN

EXISTING LANDSCAPE AREA TO REMAIN

PROP. 18' LONG PARKING SPACES WITH 2' OVERHANG ABOVE EXISTING LANDSCAPE AREA (TYP.)

PROP. EDGE OF PAVEMENT (TYP.)

PROP. LANDSCAPE AREA (TYP.)

PROP. CAPE COD BERM (TYP.)

PROP. LANDSCAPE AREA (TYP.)

PROP. CAPE COD BERM (TYP.)

INTERNAL LOT LINE TO BE ELIMINATED THROUGH APPROVAL NOT REQUIRED APPLICATION BEING FILED CONCURRENTLY WITH THIS SITE PLAN APPLICATION

PROPOSED "CONSERVATION AREA NO SNOW DUMPING" SIGN

ZONE A SURFACE WATER SUPPLY PROTECTION AREA

200' OUTER RIPARIAN ZONE

100' INNER RIPARIAN ZONE

100 FT WETLAND BUFFER (TYP.)

50 FT WETLAND BUFFER (TYP.)

WETLAND BOUNDARY (TYP.)

100 FT WETLAND BUFFER (TYP.)

51 FT WETLAND BUFFER (TYP.)

PROP. ±618 LF OF 4 FT WIDE X 2 FT DEEP STONE FILTER STRIP (TYP.)

PROP. BOULDERS ALONG STONE TRENCH WITH 30'± SPACING (TYP.)

WETLAND LINE (TYP.)

PROP. ±618 LF OF 4 FT WIDE X 2 FT DEEP STONE FILTER STRIP (TYP.)

PROP. ±618 LF OF 4 FT WIDE X 2 FT DEEP STONE FILTER STRIP (TYP.)

PROP. BOULDERS ALONG STONE TRENCH WITH 30'± SPACING (TYP.)

PROP. CAPE COD BERM (TYP.)

PROPERTY LINE (TYP.)

PROPOSED CONSTRUCTION ROUTE REFER TO SHEET CA-1-OFFSITE ACCESS EXHIBIT FOR MORE DETAILED INFORMATION

PROP. TEMPORARY GRADING EASEMENT

PROPOSED WATER MAIN EXTENSION CORRIDOR. REFER TO SHEETS C-4.1 AND W-1 FOR MORE DETAILED INFORMATION

PROP. TREE LINE (TYP.)

PROPERTY LINE (TYP.)

PROP. START OF NEW CHAIN LINK FENCE (TO MATCH EXIST)

SEWER EASEMENT B. 30622, PG. 267

LOADING DOCK

AGE GARAGE

WOODED AREA

WOODED AREA

REA

LAND COURT DISK

ROCKS

BOULDERS

LEDGE

CONC. WALK

STONE AREA

HP RAMP

TRANSFORMER

SPRT

SPEED LIMIT 30

FFE 147.8'

FFE 147.9'

441.87'

S87° 00' 43"W

N87° 00' 43"W

29.21'

WB67 TRAILER (53 FT)

TRAILER (48 FT)

WF A-70
WF A-69
WF A-71
WF A-68
WF A-72
WF A-73
WF A-75
WF A-74
WF A-67
WF A-66
WF A-65
WF A-64
WF A-63
WF A-62
WF A-61
WF A-60A
WF A-60-R
WF A-59
WF A-58
WF A-57
WF A-56
WF A-55-R
WF A-54
WF A-53
WF A-52-A
WF A-52
WF A-37
WF A-36
WF A-35
WF A-34
WF A-25-L
WF B-18
WF B-17
WF B-16
WF B-15
WF B-14
WF B-12
WF B-11

CH 1-25W
CH 1-24W
CH 1-23E
CH 1-23W
CH 1-22E
CH 1-22W

FEMA ZONE X
FEMA ZONE A

30 15 0 30 60

Date	Description	No.
	Revisions	
2.23.2021	REVISED PER PEER REVIEW COMMENTS	3
1.29.2021	REVISED PER PEER REVIEW COMMENTS	2
1.04.2021	REVISED PER PEER REVIEW COMMENTS	1

2-23-2021

COMMONWEALTH OF MASSACHUSETTS
GABRIEL R. CROCKER
CIVIL
No. 47917
REGISTERED PROFESSIONAL ENGINEER

GABRIEL R. CROCKER
PROFESSIONAL ENGINEER, MA REGISTRATION #47917

Crocker Design Group
2 SHARP STREET, UNIT B
HINGHAM, MA 02043
P: 781-919-0808

Project

WAREHOUSE BUILDING

60 RESEARCH RD AND 73 ABINGTON STREET, HINGHAM, MA

Prepared for

GILL RESEARCH DRIVE LLC.

60 RESEARCH RD , HINGHAM, MA

Drawing Title

LAYOUT PLAN

Project No.	100-102
Date	10.19.2020
Scale	1"=30'
Drawn By	AS
Approved By	GC

Drawing No.

C-2.1

C:\100\Crocker Design Group, LLC\Gabriel Crocker - Projects\100-102 Hingham - 75 Abington St\dwg\Plot Sheets\Site Plan Application_C1\LAYOUT PLAN.dwg, 03_LAYOUT PLAN (2), Feb 23, 2021 21:49

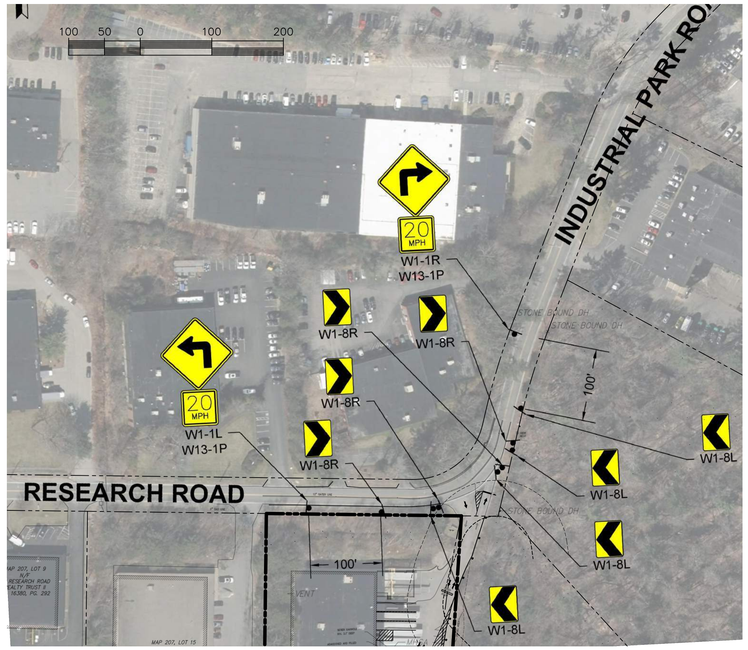

OFF-SITE TRAFFIC SIGNAGE IMPROVEMENTS ALONG RESEARCH ROAD AND INDUSTRIAL PARK ROAD ROW

SCALE: 1"=100'

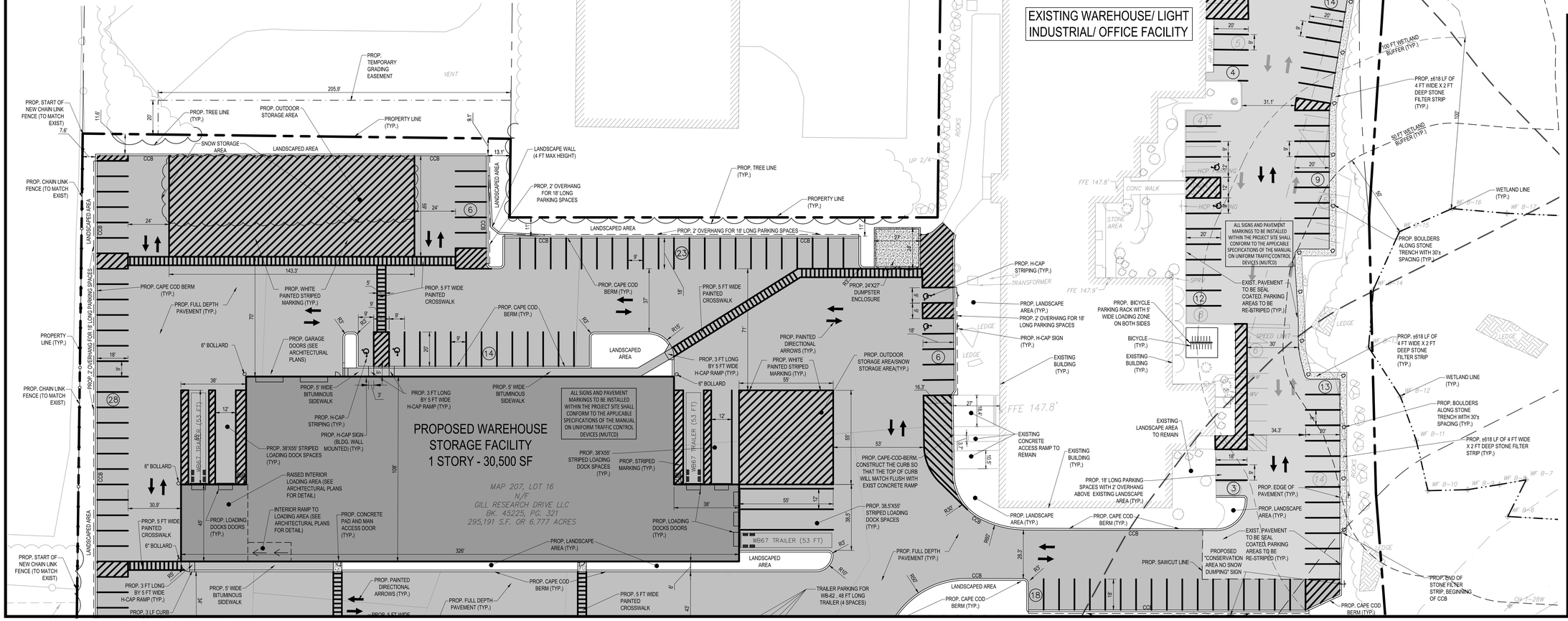
RESEARCH (PUBLIC - 50' WIDE) ROAD
12" WATER LINE
6" GAS LINE
50' DRAINAGE EASEMENT (FLOOD PLAIN AND WATERSHED PROTECTION DISTRICT)
70 RESEARCH ROAD.
MAP 207, LOT 15
N/F
HINGHAM PROPERTIES LIMITED
BK. 12918, PG. 74
60 RESEARCH RD.
MATCH LINE
SEE SHEET C-2.1 LAYOUT PLAN
EXISTING WAREHOUSE/ LIGHT INDUSTRIAL/ OFFICE FACILITY
REFER TO THE UPPER LEFT OF THIS SHEET FOR INFORMATION RELATED WITH NEW PROPOSED OFF-SITE TRAFFIC SIGNAGE IMPROVEMENTS
PROP. STOP BAR AND STOP SIGN
PROP. NEW STRIPING
PROP. START OF STONE FILTER STRIP
EXIST. PAVEMENT TO BE SEAL COATED (TYP.)
PROP. BOULDERS ALONG STONE TRENCH WITH 30± SPACING (TYP.)
PROP. 618± LF OF 4 FT WIDE X 2 FT DEEP STONE FILTER STRIP (TYP.)
TEMPORARY EASEMENT L.C. DOC. No.174728.
PROP. EDGE OF PAVEMENT (TYP.)
VARIABLE WIDTH DRIVEWAY EASEMENT PL. BK. 42, PG. 175.
WETLAND LINE (TYP.)
PROP. BOULDERS ALONG STONE TRENCH WITH 30± SPACING (TYP.)
PROP. 618± LF OF 4 FT WIDE X 2 FT DEEP STONE FILTER STRIP (TYP.)
EXIST. GRAVEL AREA TO BE REMOVED. CONTRACTOR TO EXCAVATE AREA TO THE BOTTOM OF THE GRAVEL BASE AND REPLACE WITH SUITABLE SOIL. AREA TO BE RE-VEGETATED. (SEE LANDSCAPE SHEET C-6)
MATCH LINE
SEE SHEET C-2.1 LAYOUT PLAN
ABANDONED AND FILLED
PROP. 18' LONG PARKING SPACES WITH 2' OVERHANG ABOVE EXISTING LANDSCAPE AREA (TYP.)
EXIST. PAVEMENT TO BE SEAL COATED, PARKING AREAS TO BE RE-STRIPED (TYP.)
SEWER MANHOLE INV. 3.1' DEEP
MHSA RIM: 144.2
100 FT WETLAND BUFFER (TYP.)
50 FT WETLAND BUFFER (TYP.)
PROP. 618± LF OF 4 FT WIDE X 2 FT DEEP STONE FILTER STRIP (TYP.)
WETLAND LINE (TYP.)
PROP. BOULDERS ALONG STONE TRENCH WITH 30± SPACING (TYP.)
PROP. 618± LF OF 4 FT WIDE X 2 FT DEEP STONE FILTER STRIP (TYP.)
ALL SIGNS AND PAVEMENT MARKINGS TO BE INSTALLED WITHIN THE PROJECT SITE SHALL CONFORM TO THE APPLICABLE SPECIFICATIONS OF THE MANUAL ON UNIFORM TRAFFIC CONTROL DEVICES (MUTCD)
EXIST. PAVEMENT TO BE SEAL COATED, PARKING AREAS TO BE RE-STRIPED (TYP.)
PROP. BICYCLE PARKING RACK WITH 5' WIDE LOADING ZONE ON BOTH SIDES
BICYCLE (TYP.)
EXISTING BUILDING (TYP.)
PROP. 18' LONG PARKING SPACES WITH 2' OVERHANG ABOVE EXISTING LANDSCAPE AREA (TYP.)
PROP. EDGE OF PAVEMENT (TYP.)
PROP. LANDSCAPE AREA (TYP.)
EXIST. PAVEMENT TO BE SEAL COATED, PARKING AREAS TO BE RE-STRIPED (TYP.)
PROPOSED "CONSERVATION AREA NO SNOW DUMPING" SIGN
PROP. SAWCUT LINE
PROP. CAPE COD BERM (TYP.)
PROP. END OF STONE FILTER STRIP, BEGINNING OF CCB
PROP. H-CAP STRIPING (TYP.)
PROP. LANDSCAPE AREA (TYP.)
PROP. 2 OVERHANG FOR 18' LONG PARKING SPACES
PROP. H-CAP SIGN (TYP.)
EXISTING BUILDING (TYP.)
EXISTING CONCRETE ACCESS RAMP TO REMAIN
EXISTING LANDSCAPE AREA TO REMAIN
PROP. CAPE-COD-BERM. CONSTRUCT THE CURB SO THAT THE TOP OF CURB WILL MATCH FLUSH WITH EXIST CONCRETE RAMP
PROP. 38.5'X55' STRIPED LOADING DOCK SPACES (TYP.)
PROP. FULL DEPTH PAVEMENT (TYP.)
TRAILER PARKING FOR WB-62 , 48 FT LONG TRAILER (4 SPACES)
PROPOSED WAREHOUSE STORAGE FACILITY
1 STORY - 30,500 SF
MAP 207, LOT 16
N/F
GILL RESEARCH DRIVE LLC
BK. 45225, PG. 321
295,191 S.F. OR 6.777 ACRES
ALL SIGNS AND PAVEMENT MARKINGS TO BE INSTALLED WITHIN THE PROJECT SITE SHALL CONFORM TO THE APPLICABLE SPECIFICATIONS OF THE MANUAL ON UNIFORM TRAFFIC CONTROL DEVICES (MUTCD)
PROP. 24'X27' DUMPSTER ENCLOSURE
PROP. PAINTED DIRECTIONAL ARROWS (TYP.)
PROP. WHITE PAINTED STRIPED MARKING (TYP.)
PROP. OUTDOOR STORAGE AREA/SNOW STORAGE AREA(TYP.)
PROP. 3 FT LONG BY 5 FT WIDE H-CAP RAMP (TYP.)
PROP. 5' WIDE BITUMINOUS SIDEWALK
PROP. 5 FT WIDE PAINTED CROSSWALK
PROP. CAPE COD BERM (TYP.)
PROP. 6" BOLLARD
PROP. GARAGE DOORS (SEE ARCHITECTURAL PLANS)
PROP. 38'X55' STRIPED LOADING DOCK SPACES (TYP.)
PROP. H-CAP STRIPING (TYP.)
PROP. H-CAP SIGN (BLDG. WALL MOUNTED) (TYP.)
PROP. STRIPED MARKING (TYP.)
RAISED INTERIOR LOADING AREA (SEE ARCHITECTURAL PLANS FOR DETAIL)
INTERIOR RAMP TO LOADING AREA (SEE ARCHITECTURAL PLANS FOR DETAIL)
PROP. LOADING DOCKS DOORS (TYP.)
PROP. CONCRETE PAD AND MAN ACCESS DOOR (TYP.)
PROP. LANDSCAPE AREA (TYP.)
PROP. 3 LF CURB
PROP. TEMPORARY GRADING EASEMENT
PROP. TREE LINE (TYP.)
PROP. OUTDOOR STORAGE AREA
PROPERTY LINE (TYP.)
SNOW STORAGE AREA
LANDSCAPED AREA
LANDSCAPE WALL (4 FT MAX HEIGHT)
PROP. 2' OVERHANG FOR 18' LONG PARKING SPACES
PROP. START OF NEW CHAIN LINK FENCE (TO MATCH EXIST)
PROP. CHAIN LINK FENCE (TO MATCH EXIST)
PROP. 2' OVERHANG FOR 18' LONG PARKING SPACES
WB67 TRAILER (53 FT)
CCB
LANDSCAPED AREA
205.9'
143.3'
328'
108'
71'
55'
53'
38'
30.5'
24'
18'
12'
9'
5'
3'
20'
16.3'
34.3'
31.1'
28.7'
26.3'
R30'
R15'
R25'
R3'
R5'
R10'
R20'
R60'
R50'
R40'
R2'
UP 2/4"
ROCKS
VENT
LEDGE
CONC WALK
STONE AREA
SPA
SPEED LIMIT
FFE 147.8'
FFE 147.9'
WV
WM
GM
GS
HYDW
BOL
BAY 147.83
BAY 147.86
UCOV
RIP RAP
WSO
EXISTING RAIN GARDEN (TO REMAIN)
WF B-35
WF B-34
WF B-33
WF B-32
WF B-31
WF B-30
WF B-29
WF B-28
WF B-27
WF B-26
WF B-25
WF B-16
WF B-15
WF B-14
WF B-13
WF B-12
WF B-11
WF B-10
WF B-9
WF B-8
WF B-7
WF B-6
CH 2-12N
CH 2-11N
CH 2-12S
CH 2-11S
CH 2-10N
CH 2-10S
CH 2-9W
CH 2-9S
CH 1-28W
CH 2-13N
CH 2-13S
CH 2-14N
CH 2-14S
CH 2-15N
CH 2-15S
CH 2-16N
CH 2-16S
CH 2-17S
CH 2-18S
CH 2-19N
CH 2-19S
CH 2-20N
CH 2-20S
CH 2-21N
CH 2-21S
CH 2-22N
CH 2-22S
CH 2-23N
CH 2-23S
CH 2-24N
CH 2-24S
CH 2-25N
CH 2-25S
CH 2-26N
CH 2-26S
CH 2-27N
CH 2-27S
CH 2-28N
CH

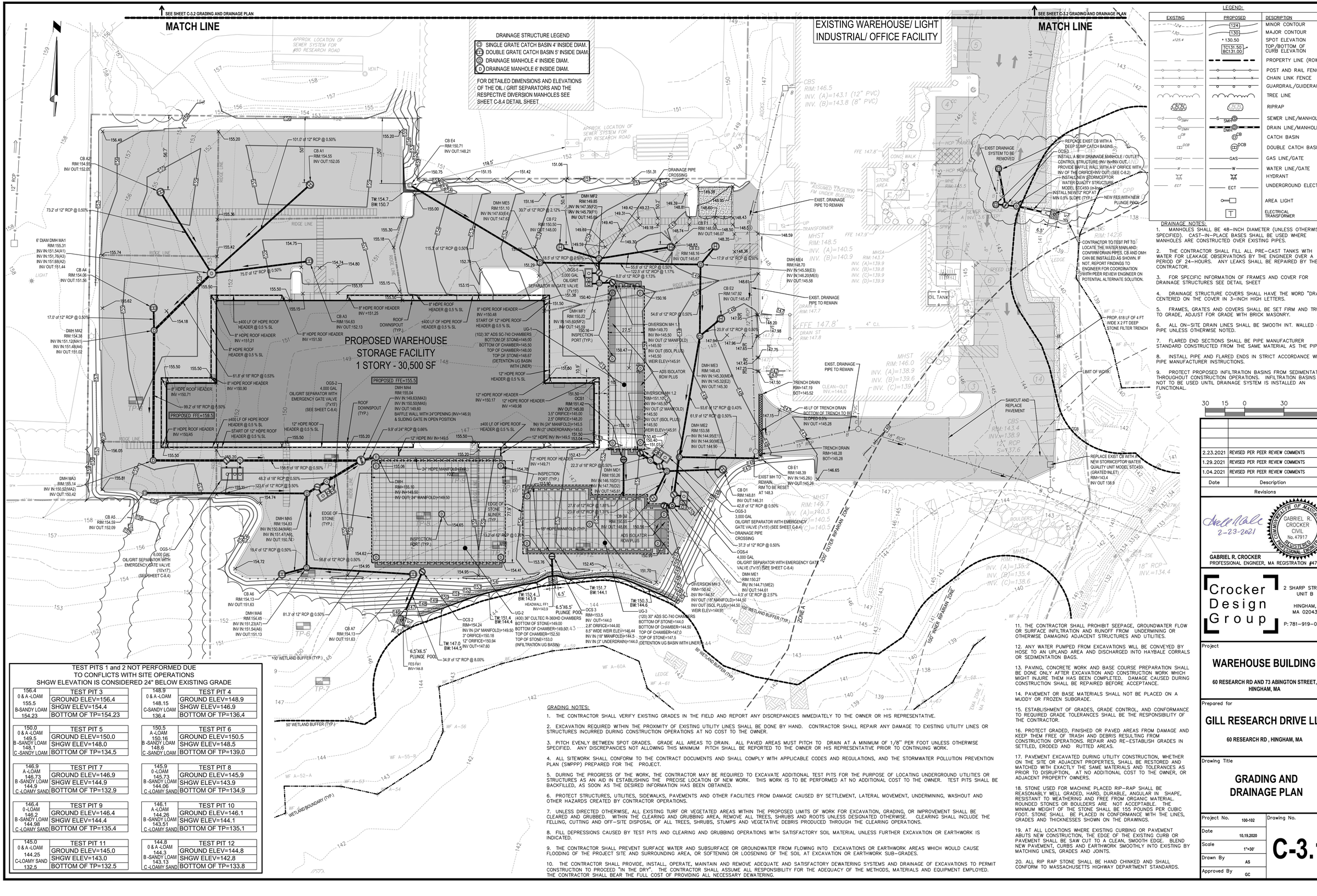

DRAINAGE NOTES:

1. MANHOLES SHALL BE 48--INCH DIAMETER (UNLESS OTHERWISE SPECIFIED). CAST--IN--PLACE BASES SHALL BE USED WHERE MANHOLES ARE CONSTRUCTED OVER EXISTING PIPES.
2. THE CONTRACTOR SHALL FILL ALL PRE--CAST TANKS WITH WATER FOR LEAKAGE OBSERVATIONS BY THE ENGINEER OVER A PERIOD OF 24--HOURS. ANY LEAKS SHALL BE REPAIRED BY THE CONTRACTOR.
3. FOR SPECIFIC INFORMATION OF FRAMES AND COVER FOR DRAINAGE STRUCTURES SEE DETAIL SHEET
4. DRAINAGE STRUCTURE COVERS SHALL HAVE THE WORD "DRAIN" CENTERED ON THE COVER IN 3--INCH HIGH LETTERS.
5. FRAMES, GRATES AND COVERS SHALL BE SET FIRM AND TRUE TO GRADE, ADJUST FOR GRADE WITH BRICK MASONRY.
6. ALL ON--SITE DRAIN LINES SHALL BE SMOOTH INT. WALLED CPE PIPE UNLESS OTHERWISE NOTED.
7. FLARED END SECTIONS SHALL BE PIPE MANUFACTURER STANDARD CONSTRUCTED FROM THE SAME MATERIAL AS THE PIPE.
8. INSTALL PIPE AND FLARED ENDS IN STRICT ACCORDANCE WITH PIPE MANUFACTURER INSTRUCTIONS.
9. PROTECT PROPOSED INFILTRATION BASINS FROM SEDIMENTATION THROUGHOUT CONSTRUCTION OPERATIONS. INFILTRATION BASINS ARE NOT TO BE USED UNTIL DRAINAGE SYSTEM IS INSTALLED AN FUNCTIONAL.

GRADING NOTES:

1. THE CONTRACTOR SHALL VERIFY EXISTING GRADES IN THE FIELD AND REPORT ANY DISCREPANCIES IMMEDIATELY TO THE OWNER OR HIS REPRESENTATIVE.
2. EXCAVATION REQUIRED WITHIN THE PROXIMITY OF EXISTING UTILITY LINES SHALL BE DONE BY HAND. CONTRACTOR SHALL REPAIR ANY DAMAGE TO EXISTING UTILITY LINES OR STRUCTURES INCURRED DURING CONSTRUCTION OPERATIONS AT NO COST TO THE OWNER.
3. PITCH EVENLY BETWEEN SPOT GRADES. GRADE ALL AREAS TO DRAIN. ALL PAVED AREAS MUST PITCH TO DRAIN AT A MINIMUM OF 1/8" PER FOOT UNLESS OTHERWISE SPECIFIED. ANY DISCREPANCIES NOT ALLOWING THIS MINIMUM PITCH SHALL BE REPORTED TO THE OWNER OR HIS REPRESENTATIVE PRIOR TO CONTINUING WORK.
4. ALL SITEWORK SHALL CONFORM TO THE CONTRACT DOCUMENTS AND SHALL COMPLY WITH APPLICABLE CODES AND REGULATIONS, AND THE STORMWATER POLLUTION PREVENTION PLAN (SWPPP) PREPARED FOR THE PROJECT.
5. DURING THE PROGRESS OF THE WORK, THE CONTRACTOR MAY BE REQUIRED TO EXCAVATE ADDITIONAL TEST PITS FOR THE PURPOSE OF LOCATING UNDERGROUND UTILITIES OR STRUCTURES AS AN AID IN ESTABLISHING THE PRECISE LOCATION OF NEW WORK. THIS WORK IS TO BE PERFORMED AT NO ADDITIONAL COST TO THE OWNER. TEST PITS SHALL BE BACKFILLED, AS SOON AS THE DESIRED INFORMATION HAS BEEN OBTAINED.
6. PROTECT STRUCTURES, UTILITIES, SIDEWALKS, PAVEMENTS AND OTHER FACILITIES FROM DAMAGE CAUSED BY SETTLEMENT, LATERAL MOVEMENT, UNDERMINING, WASHOUT AND OTHER HAZARDS CREATED BY CONTRACTOR OPERATIONS.
7. UNLESS DIRECTED OTHERWISE, ALL EXISTING TURF OR VEGETATED AREAS WITHIN THE PROPOSED LIMITS OF WORK FOR EXCAVATION, GRADING, OR IMPROVEMENT SHALL BE CLEARED AND GRUBBED. WITHIN THE CLEARING AND GRUBBING AREA, REMOVE ALL TREES, SHRUBS AND ROOTS UNLESS DESIGNATED OTHERWISE. CLEARING SHALL INCLUDE THE FELLING, CUTTING AND OFF--SITE DISPOSAL OF ALL TREES, SHRUBS, STUMPS AND VEGETATIVE DEBRIS PRODUCED THROUGH THE CLEARING OPERATIONS.
8. FILL DEPRESSIONS CAUSED BY TEST PITS AND CLEARING AND GRUBBING OPERATIONS WITH SATISFACTORY SOIL MATERIAL UNLESS FURTHER EXCAVATION OR EARTHWORK IS INDICATED.
9. THE CONTRACTOR SHALL PREVENT SURFACE WATER AND SUBSURFACE OR GROUNDWATER FROM FLOWING INTO EXCAVATIONS OR EARTHWORK AREAS WHICH WOULD CAUSE FLOODING OF THE PROJECT SITE AND SURROUNDING AREA, OR SOFTENING OR LOOSENING OF THE SOIL AT EXCAVATION OR EARTHWORK SUB--GRADES.
10. THE CONTRACTOR SHALL PROVIDE, INSTALL, OPERATE, MAINTAIN AND REMOVE ADEQUATE AND SATISFACTORY DEWATERING SYSTEMS AND DRAINAGE OF EXCAVATIONS TO PERMIT CONSTRUCTION TO PROCEED "IN THE DRY". THE CONTRACTOR SHALL ASSUME ALL RESPONSIBILITY FOR THE ADEQUACY OF THE METHODS, MATERIALS AND EQUIPMENT EMPLOYED. THE CONTRACTOR SHALL BEAR THE FULL COST OF PROVIDING ALL NECESSARY DEWATERING.
11. THE CONTRACTOR SHALL PROHIBIT SEEPAGE, GROUNDWATER FLOW OR SURFACE INFILTRATION AND RUNOFF FROM UNDERMINING OR OTHERWISE DAMAGING ADJACENT STRUCTURES AND UTILITIES.
12. ANY WATER PUMPED FROM EXCAVATIONS WILL BE CONVEYED BY HOSE TO AN UPLAND AREA AND DISCHARGED INTO HAYBALE CORRALS OR SEDIMENTATION BAGS.
13. PAVING, CONCRETE WORK AND BASE COURSE PREPARATION SHALL BE DONE ONLY AFTER EXCAVATION AND CONSTRUCTION WORK WHICH MIGHT INJURE THEM HAS BEEN COMPLETED. DAMAGE CAUSED DURING CONSTRUCTION SHALL BE REPAIRED BEFORE ACCEPTANCE.
14. PAVEMENT OR BASE MATERIALS SHALL NOT BE PLACED ON A MUDDY OR FROZEN SUBGRADE.
15. ESTABLISHMENT OF GRADES, GRADE CONTROL, AND CONFORMANCE TO REQUIRED GRADE TOLERANCES SHALL BE THE RESPONSIBILITY OF THE CONTRACTOR.
16. PROTECT GRADED, FINISHED OR PAVED AREAS FROM DAMAGE AND KEEP THEM FREE OF TRASH AND DEBRIS RESULTING FROM CONSTRUCTION OPERATIONS. REPAIR AND RE--ESTABLISH GRADES IN SETTLED, ERODED AND RUTTED AREAS.
17. PAVEMENT EXCAVATED DURING UTILITY CONSTRUCTION, WHETHER ON THE SITE OR ADJACENT PROPERTIES, SHALL BE RESTORED AND MATCHED WITH EXACTLY THE SAME MATERIALS AND TOLERANCES AS PRIOR TO DISRUPTION, AT NO ADDITIONAL COST TO THE OWNER, OR ADJACENT PROPERTY OWNERS.
18. STONE USED FOR MACHINE PLACED RIP--RAP SHALL BE REASONABLY WELL GRADED, HARD, DURABLE, ANGULAR IN SHAPE, RESISTANT TO WEATHERING AND FREE FROM ORGANIC MATERIAL. ROUNDED STONES OR BOULDERS ARE NOT ACCEPTABLE. THE MINIMUM WEIGHT OF THE STONE SHALL BE 155 POUNDS PER CUBIC FOOT. STONE SHALL BE PLACED IN CONFORMANCE WITH THE LINES, GRADES AND THICKNESSES SHOWN ON THE DRAWINGS.
19. AT ALL LOCATIONS WHERE EXISTING CURBING OR PAVEMENT ABUTS NEW CONSTRUCTION, THE EDGE OF THE EXISTING CURB OR PAVEMENT SHALL BE SAW CUT TO A CLEAN, SMOOTH EDGE. BLEND NEW PAVEMENT, CURBS AND EARTHWORK SMOOTHLY INTO EXISTING BY MATCHING LINES, GRADES AND JOINTS.
20. ALL RIP RAP STONE SHALL BE HAND CHINKED AND SHALL CONFORM TO MASSACHUSETTS HIGHWAY DEPARTMENT STANDARDS.

Date	Description	No.
	Revisions	
2.23.2021	REVISED PER PEER REVIEW COMMENTS	3
1.29.2021	REVISED PER PEER REVIEW COMMENTS	2
1.04.2021	REVISED PER PEER REVIEW COMMENTS	1

2-23-2021

COMMONWEALTH OF MASSACHUSETTS GABRIEL R. CROCKER CIVIL No. 47917 REGISTERED PROFESSIONAL ENGINEER

GABRIEL R. CROCKER
PROFESSIONAL ENGINEER, MA REGISTRATION #47917

Crocker Design Group
2 SHARP STREET, UNIT B
HINGHAM, MA 02043
P: 781--919--0808

Project
WAREHOUSE BUILDING
60 RESEARCH RD AND 73 ABINGTON STREET, HINGHAM, MA

Prepared for
GILL RESEARCH DRIVE LLC.
60 RESEARCH RD , HINGHAM, MA

Drawing Title
GRADING AND DRAINAGE PLAN

Project No. 100-102	Drawing No. C-3.1
Date 10.19.2020	
Scale 1"=30'	
Drawn By AS	
Approved By GC	

C:\CDG\Crocker Design Group, LLC\Crocker Projects\100-102 Hingham - 73 Abington St\Wing\Plan Applications\DARAD Plan\Proj. C-3 GRAD. Feb 23, 2021 21:49

RESEARCH (PUBLIC - 50' WIDE) ROAD

12" WATER LINE

6" GAS LINE

50' DRAINAGE EASEMENT (FLOOD PLAIN AND WATERSHED PROTECTION DISTRICT)

80 RESEARCH ROAD.

70 RESEARCH ROAD.

60 RESEARCH RD.

VARIABLE WIDTH DRIVEWAY EASEMENT PL. BK. 42, PG. 175.

LIMIT OF WORK

EXIST. RAIN GARDEN (TO REMAIN)

PROP. 618 LF OF 4 FT WIDE X 2 FT DEEP STONE FILTER TRENCH

WETLAND BOUNDARY (TYP.)

50' WETLAND BUFFER (TYP.)

100' WETLAND BUFFER (TYP.)

MATCH LINE
SEE SHEET C-3.1 GRADING AND DRAINAGE PLAN

MATCH LINE
SEE SHEET C-3.1 GRADING AND DRAINAGE PLAN

DRAINAGE STRUCTURE LEGEND

- SINGLE GRATE CATCH BASIN 4' INSIDE DIAM.
- DOUBLE GRATE CATCH BASIN 5' INSIDE DIAM.
- DRAINAGE MANHOLE 4' INSIDE DIAM.
- DRAINAGE MANHOLE 6' INSIDE DIAM.

FOR DETAILED DIMENSIONS AND ELEVATIONS OF THE OIL / GRIT SEPARATORS AND THE RESPECTIVE DIVERSION MANHOLES SEE SHEET C-8.4 DETAIL SHEET.

EXISTING WAREHOUSE/ LIGHT INDUSTRIAL/ OFFICE FACILITY

PROPOSED WAREHOUSE STORAGE FACILITY 1 STORY - 30,500 SF

PROPOSED FFE=155.5

PROPOSED FFE=159.5

APPROX. LOCATION OF SEWER SYSTEM FOR #80 RESEARCH ROAD

APPROX. LOCATION OF SEWER SYSTEM FOR #70 RESEARCH ROAD

ASSUMED LOCATION OF UNDERGROUND UTILITIES

LEGEND:

EXISTING	PROPOSED	DESCRIPTION
124	124	MINOR CONTOUR
130	130	MAJOR CONTOUR
x125.4	+ 130.50	SPOT ELEVATION
	TC131.50 BC131.00	TOP /BOTTOM OF CURB ELEVATION
		PROPERTY LINE (ROW)
		POST AND RAIL FENCE
		CHAIN LINK FENCE
		GUARDRAIL/GUIDERAIL
		TREE LINE
		RIPRAP
S SMH	S SMH	SEWER LINE/MANHOLE
D DMH	D DMH	DRAIN LINE/MANHOLE
CB	CB	CATCH BASIN
DCB	DCB	DOUBLE CATCH BASIN
GAS	GAS	GAS LINE/GATE
W	W	WATER LINE/GATE
		HYDRANT
ECT	ECT	UNDERGROUND ELECTRIC,
		AREA LIGHT
	T	ELECTRICAL TRANSFORMER

30 15 0 30 60

Date	Description	No.
2.23.2021	REVISED PER PEER REVIEW COMMENTS	3
1.29.2021	REVISED PER PEER REVIEW COMMENTS	2
1.04.2021	REVISED PER PEER REVIEW COMMENTS	1

Revisions

2-23-2021

COMMONWEALTH OF MASSACHUSETTS GABRIEL R. CROCKER CIVIL No. 47917 REGISTERED PROFESSIONAL ENGINEER

GABRIEL R. CROCKER
PROFESSIONAL ENGINEER, MA REGISTRATION #47917

Crocker Design Group
2 SHARP STREET, UNIT B
HINGHAM, MA 02043
P: 781-919-0808

Project
WAREHOUSE BUILDING
60 RESEARCH RD AND 73 ABINGTON STREET, HINGHAM, MA

Prepared for
GILL RESEARCH DRIVE LLC.
60 RESEARCH RD , HINGHAM, MA

Drawing Title
GRADING AND DRAINAGE PLAN

Project No.	100-102
Date	10.19.2020
Scale	1"=30'
Drawn By	AS
Approved By	GC

Drawing No.
C-3.2

C:\CDG\Crocker Design Group, LLC\Crocker - Projects\100-102 Hingham - 73 Abington St\dwg\Plot Sheets\Site Plan Application\24x36\D ARCH\Arch_C-3 GRAD (2).dwg, Feb 23, 2021 21:50

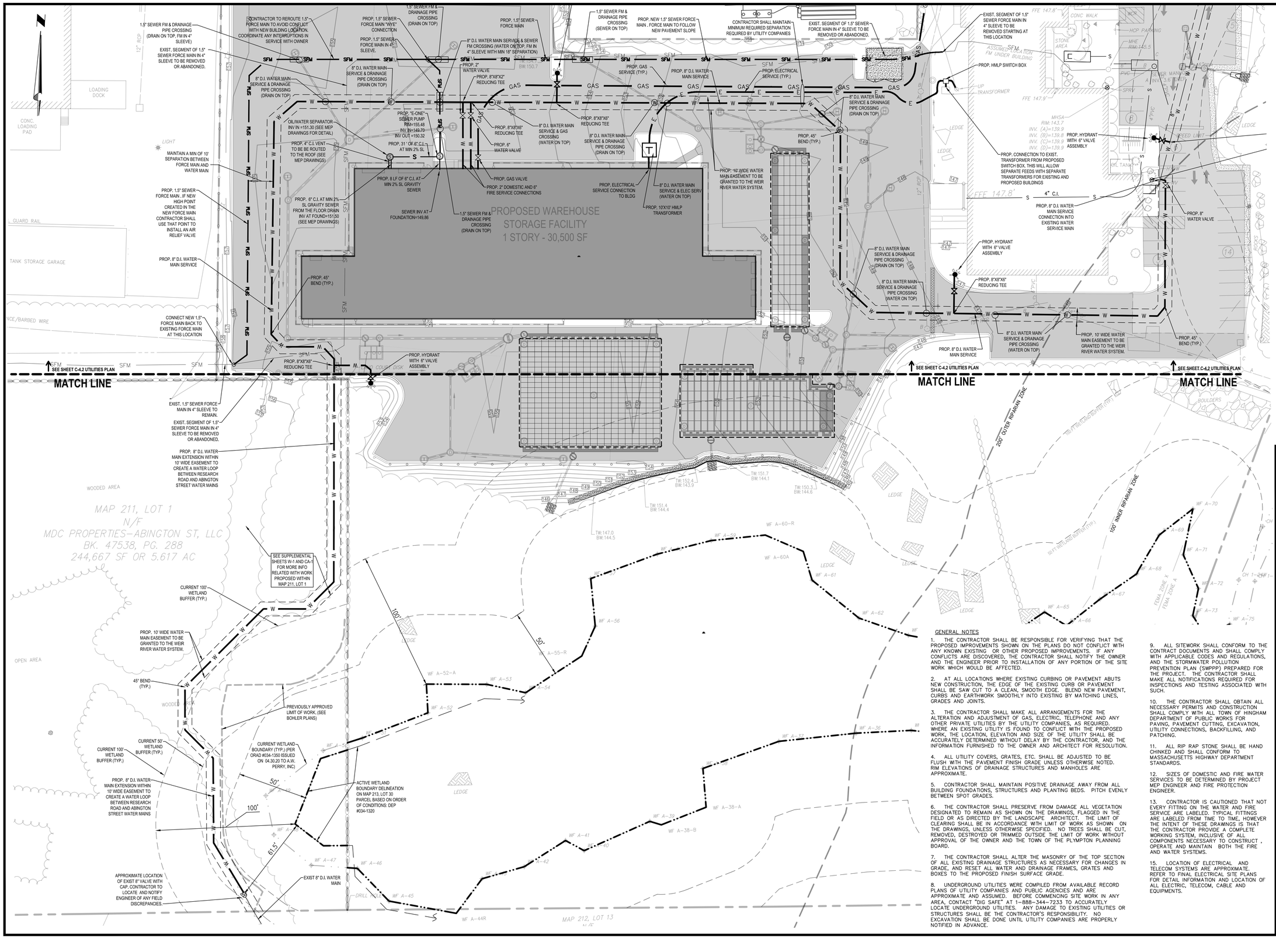

Date	Description	No.
2.23.2021	REVISED PER PEER REVIEW COMMENTS	3
1.29.2021	REVISED PER PEER REVIEW COMMENTS	2
1.04.2021	REVISED PER PEER REVIEW COMMENTS	1

Revisions

2-23-2021

COMMONWEALTH OF MASSACHUSETTS — GABRIEL R. CROCKER — CIVIL — No. 47917 — REGISTERED PROFESSIONAL ENGINEER

GABRIEL R. CROCKER
PROFESSIONAL ENGINEER, MA REGISTRATION #47917

Crocker Design Group
2 SHARP STREET, UNIT B
HINGHAM, MA 02043
P: 781-919-0808

Project

WAREHOUSE BUILDING

60 RESEARCH RD AND 73 ABINGTON STREET, HINGHAM, MA

Prepared for

GILL RESEARCH DRIVE LLC.

60 RESEARCH RD , HINGHAM, MA

Drawing Title

UTILITIES PLAN (SHEET 1 OF 2)

Project No. 100-102	Drawing No. C-4.1
Date 10.19.2020	
Scale 1"=30'	
Drawn By AS	
Approved By GC	

GENERAL NOTES

1. THE CONTRACTOR SHALL BE RESPONSIBLE FOR VERIFYING THAT THE PROPOSED IMPROVEMENTS SHOWN ON THE PLANS DO NOT CONFLICT WITH ANY KNOWN EXISTING OR OTHER PROPOSED IMPROVEMENTS. IF ANY CONFLICTS ARE DISCOVERED, THE CONTRACTOR SHALL NOTIFY THE OWNER AND THE ENGINEER PRIOR TO INSTALLATION OF ANY PORTION OF THE SITE WORK WHICH WOULD BE AFFECTED.

2. AT ALL LOCATIONS WHERE EXISTING CURBING OR PAVEMENT ABUTS NEW CONSTRUCTION, THE EDGE OF THE EXISTING CURB OR PAVEMENT SHALL BE SAW CUT TO A CLEAN, SMOOTH EDGE. BLEND NEW PAVEMENT, CURBS AND EARTHWORK SMOOTHLY INTO EXISTING BY MATCHING LINES, GRADES AND JOINTS.

3. THE CONTRACTOR SHALL MAKE ALL ARRANGEMENTS FOR THE ALTERATION AND ADJUSTMENT OF GAS, ELECTRIC, TELEPHONE AND ANY OTHER PRIVATE UTILITIES BY THE UTILITY COMPANIES, AS REQUIRED. WHERE AN EXISTING UTILITY IS FOUND TO CONFLICT WITH THE PROPOSED WORK, THE LOCATION, ELEVATION AND SIZE OF THE UTILITY SHALL BE ACCURATELY DETERMINED WITHOUT DELAY BY THE CONTRACTOR, AND THE INFORMATION FURNISHED TO THE OWNER AND ARCHITECT FOR RESOLUTION.

4. ALL UTILITY COVERS, GRATES, ETC. SHALL BE ADJUSTED TO BE FLUSH WITH THE PAVEMENT FINISH GRADE UNLESS OTHERWISE NOTED. RIM ELEVATIONS OF DRAINAGE STRUCTURES AND MANHOLES ARE APPROXIMATE.

5. CONTRACTOR SHALL MAINTAIN POSITIVE DRAINAGE AWAY FROM ALL BUILDING FOUNDATIONS, STRUCTURES AND PLANTING BEDS. PITCH EVENLY BETWEEN SPOT GRADES.

6. THE CONTRACTOR SHALL PRESERVE FROM DAMAGE ALL VEGETATION DESIGNATED TO REMAIN AS SHOWN ON THE DRAWINGS, FLAGGED IN THE FIELD OR AS DIRECTED BY THE LANDSCAPE ARCHITECT. THE LIMIT OF CLEARING SHALL BE IN ACCORDANCE WITH LIMIT OF WORK AS SHOWN ON THE DRAWINGS, UNLESS OTHERWISE SPECIFIED. NO TREES SHALL BE CUT, REMOVED, DESTROYED OR TRIMMED OUTSIDE THE LIMIT OF WORK WITHOUT APPROVAL OF THE OWNER AND THE TOWN OF THE PLYMPTON PLANNING BOARD.

7. THE CONTRACTOR SHALL ALTER THE MASONRY OF THE TOP SECTION OF ALL EXISTING DRAINAGE STRUCTURES AS NECESSARY FOR CHANGES IN GRADE, AND RESET ALL WATER AND DRAINAGE FRAMES, GRATES AND BOXES TO THE PROPOSED FINISH SURFACE GRADE.

8. UNDERGROUND UTILITIES WERE COMPILED FROM AVAILABLE RECORD PLANS OF UTILITY COMPANIES AND PUBLIC AGENCIES AND ARE APPROXIMATE AND ASSUMED. BEFORE COMMENCING SITE WORK IN ANY AREA, CONTACT "DIG SAFE" AT 1-888-344-7233 TO ACCURATELY LOCATE UNDERGROUND UTILITIES. ANY DAMAGE TO EXISTING UTILITIES OR STRUCTURES SHALL BE THE CONTRACTOR'S RESPONSIBILITY. NO EXCAVATION SHALL BE DONE UNTIL UTILITY COMPANIES ARE PROPERLY NOTIFIED IN ADVANCE.

9. ALL SITEWORK SHALL CONFORM TO THE CONTRACT DOCUMENTS AND SHALL COMPLY WITH APPLICABLE CODES AND REGULATIONS, AND THE STORMWATER POLLUTION PREVENTION PLAN (SWPPP) PREPARED FOR THE PROJECT. THE CONTRACTOR SHALL MAKE ALL NOTIFICATIONS REQUIRED FOR INSPECTIONS AND TESTING ASSOCIATED WITH SUCH.

10. THE CONTRACTOR SHALL OBTAIN ALL NECESSARY PERMITS AND CONSTRUCTION SHALL COMPLY WITH ALL TOWN OF HINGHAM DEPARTMENT OF PUBLIC WORKS FOR PAVING, PAVEMENT CUTTING, EXCAVATION, UTILITY CONNECTIONS, BACKFILLING, AND PATCHING.

11. ALL RIP RAP STONE SHALL BE HAND CHINKED AND SHALL CONFORM TO MASSACHUSETTS HIGHWAY DEPARTMENT STANDARDS.

12. SIZES OF DOMESTIC AND FIRE WATER SERVICES TO BE DETERMINED BY PROJECT MEP ENGINEER AND FIRE PROTECTION ENGINEER.

13. CONTRACTOR IS CAUTIONED THAT NOT EVERY FITTING ON THE WATER AND FIRE SERVICE ARE LABELED. TYPICAL FITTINGS ARE LABELED FROM TIME TO TIME, HOWEVER THE INTENT OF THESE DRAWINGS IS THAT THE CONTRACTOR PROVIDE A COMPLETE WORKING SYSTEM, INCLUSIVE OF ALL COMPONENTS NECESSARY TO CONSTRUCT , OPERATE AND MAINTAIN BOTH THE FIRE AND WATER SYSTEMS.

15. LOCATION OF ELECTRICAL AND TELECOM SYSTEMS ARE APPROXIMATE. REFER TO FINAL ELECTRICAL SITE PLANS FOR DETAIL INFORMATION AND LOCATION OF ALL ELECTRIC, TELECOM, CABLE AND EQUIPMENTS.

C:\CDG\Crocker Design Group, LLC\Gabriel Crocker - Projects\100-102 Hingham - 73 Abington St\dwg\Plot Sheets\Site Plan Application\ - 05 UTIL PLAN.dwg, C-4.1 UTIL, Feb 23, 2021 21:50

RESEARCH (PUBLIC – 50' WIDE) ROAD

80 RESEARCH ROAD.

70 RESEARCH ROAD.

60 RESEARCH RD.

EXISTING WAREHOUSE/ LIGHT INDUSTRIAL/ OFFICE FACILITY

PROPOSED WAREHOUSE STORAGE FACILITY 1 STORY - 30,500 SF

MATCH LINE
SEE C-4.1 UTILITIES PLAN

MATCH LINE
SEE C-4.1 UTILITIES PLAN

MATCH LINE
SEE C-4.1 UTILITIES PLAN

PROP. GAS SERVICE CONNECTION INTO EXIST SERVICE. CONTRACTOR TO COORDINATE WITH GAS COMPANY LOCATION OF THE CONNECTION AND SIZE OF THE PROPOSED SERVICE.

PROP. GAS SERVICE (TYP.) COORDINATE WITH NATIONAL GRID FOR FINAL SERVICE ROAUTING

PROP. GAS SERVICE (TYP.) COORDINATE WITH NATIONAL GRID FOR FINAL SERVICE ROAUTING

ZONE A SURFACE WATER SUPPLY PROTECTION AREA

50' DRAINAGE EASEMENT (FLOOD PLAIN AND WATERSHED PROTECTION DISTRICT)

6" GAS LINE

12" WATER LINE

APPROX. LOCATION OF SEWER SYSTEM FOR #80 RESEARCH ROAD

APPROX. LOCATION OF SEWER SYSTEM FOR #70 RESEARCH ROAD

EXIST. 8" D.I. WATER MAIN (TO REMAIN) (TYP.)

PROP. 10' WIDE WATER MAIN EASEMENT TO BE GRANTED TO THE WEIR RIVER WATER SYSTEM. COORDINATE ALL WATER MAIN IMPROVEMENTS WORK WITH WEIR RIVER WATER SYSTEM.

100 FT WETLAND BUFFER (TYP.)

50 FT WETLAND BUFFER (TYP.)

WETLAND BOUNDARY (TYP.)

PROP. HYDRANT WITH 6" VALVE ASSEMBLY

PROP. 1.5" SEWER FM & DRAINAGE PIPE CROSSING (SEWER ON TOP)

PROP. NEW 1.5" SEWER FORCE MAIN , FORCE MAIN TO FOLLOW NEW PAVEMENT SLOPE

CONTRACTOR SHALL MAINTAIN MINIMUM REQUIRED SEPARATION REQUIRED BY UTILITY COMPANIES

EXIST. SEGMENT OF 1.5" SEWER FORCE MAIN IN 4" SLEEVE TO BE REMOVED OR ABANDONED.

EXIST. SEGMENT OF 1.5" SEWER FORCE MAIN IN 4" SLEEVE TO BE REMOVED STARTING AT THIS LOCATION

CONTRACTOR TO REROUTE 1.5" FORCE MAIN TO AVOID CONFLICT WITH NEW BUILDING LOCATION. COORDINATE ANY INTERRUPTIONS IN SERVICE WITH OWNER

1.5" SEWER FORCE MAIN

1.5" SEWER FM & DRAINAGE PIPE CROSSING (DRAIN ON TOP)

PROP. 1.5" SEWER FORCE MAIN "WYE" CONNECTION

PROP. 1.5" SEWER FORCE MAIN IN 4" SLEEVE.

8" D.I. WATER MAIN SERVICE & SEWER FM CROSSING (WATER ON TOP, FM IN 4" SLEEVE WITH MIN 18" SEPARATION)

1.5" SEWER FM & DRAINAGE PIPE CROSSING (DRAIN ON TOP)

EXIST, SEGMENT OF 1.5" SEWER FORCE MAIN IN 4" SLEEVE TO BE REMOVED OR ABANDONED.

8" D.I. WATER MAIN SERVICE & DRAINAGE PIPE CROSSING (DRAIN ON TOP)

8" D.I. WATER MAIN SERVICE & DRAINAGE PIPE CROSSING (DRAIN ON TOP)

PROP. 2" WATER VALVE

PROP. 8"X8"X2" REDUCING TEE

PROP. GAS SERVICE (TYP.)

PROP. 8" D.I. WATER MAIN SERVICE

PROP. ELECTRICAL SERVICE (TYP.)

PROP. 8"X8"X6" REDUCING TEE

8" D.I. WATER MAIN SERVICE & GAS CROSSING (WATER ON TOP)

8" D.I. WATER MAIN SERVICE & DRAINAGE PIPE CROSSING (DRAIN ON TOP)

8" D.I. WATER MAIN SERVICE & DRAINAGE PIPE CROSSING (DRAIN ON TOP)

OIL/WATER SEPARATOR INV IN =151.30 (SEE MEP DRAWINGS FOR DETAIL)

PROP. "E-ONE" SEWER PUMP RIM=155.48 INV IN=146.70 INV OUT =150.32

PROP. 4" C.I. VENT TO BE BE ROUTED TO THE ROOF (SEE MEP DRAWINGS)

PROP. 31 ' OF 6" C.I. AT MIN 2% SL

PROP. 6" WATER VALVE

PROP. 8"X8"X6" REDUCING TEE

PROP. GAS VALVE

PROP. 2" DOMESTIC AND 6" FIRE SERVICE CONNECTIONS

PROP. 8 LF OF 6" C.I. AT MIN 2% SL GRAVITY SEWER

PROP. 6" C.I. AT MIN 2% SL GRAVITY SEWER FROM THE FLOOR DRAIN INV AT FOUND=151.50 (SEE MEP DRAWINGS)

SEWER INV AT FOUNDATION=149.86

1.5" SEWER FM & DRAINAGE PIPE CROSSING (DRAIN ON TOP)

PROP. ELECTRICAL SERVICE CONNECTION TO BLDG

PROP. 10'X10' HMLP TRANSFORMER

PROP. 8" D.I. WATER MAIN SERVICE & ELEC SERV (WATER ON TOP)

PROP. 10' WIDE WATER MAIN EASEMENT TO BE GRANTED TO THE WEIR RIVER WATER SYSTEM.

PROP. 45° BEND (TYP.)

PROP. HMLP SWITCH BOX

PROP. CONNECTION TO EXIST. TRANSFORMER FROM PROPOSED SWITCH BOX. THIS WILL ALLOW SEPARATE FEEDS WITH SEPARATE TRANSFORMERS FOR EXISTING AND PROPOSED BUILDINGS

PROP. HYDRANT WITH 6" VALVE ASSEMBLY

PROP. 8" D.I. WATER MAIN SERVICE CONNECTION INTO EXISTING WATER SERVICE MAIN

PROP. 8" WATER VALVE

PROP. 8"X8"X6" WET TAP CONNECTION

EXIST. SEPARATE DOMESTIC AND FIRE SERVICES TO REMAIN. COORDINATE ANY INTERRUPTIONS IN SERVICE WITH OWNER AND WEIR RIVER WATER SYSTEM

PROP. 8" D.I. WATER MAIN SERVICE & DRAINAGE PIPE CROSSING (DRAIN ON TOP)

PROP. 8"X8"X6" REDUCING TEE

PROP. HYDRANT WITH 6" VALVE ASSEMBLY

PROP. 8" D.I. WATER MAIN SERVICE & DRAINAGE PIPE CROSSING (WATER ON TOP)

8" D.I. WATER MAIN SERVICE & DRAINAGE PIPE CROSSING (WATER ON TOP)

PROP. 8" D.I. WATER MAIN SERVICE

PROP. 10' WIDE WATER MAIN EASEMENT TO BE GRANTED TO THE WEIR RIVER WATER SYSTEM.

PROP. 45° BEND (TYP.)

PROP. 45° BEND (TYP.)

PROP. HYDRANT WITH 6" VALVE ASSEMBLY

PROP. 8"X8"X6" REDUCING TEE

CONNECT NEW 1.5" FORCE MAIN BACK TO EXISTING FORCE MAIN AT THIS LOCATION

PROP. 8" D.I. WATER MAIN SERVICE

MAINTAIN A MIN OF 10' SEPARATION BETWEEN FORCE MAIN AND WATER MAIN

PROP. 1.5" SEWER FORCE MAIN , IF NEW HIGH POINT CREATED IN THE NEW FORCE MAIN CONTRACTOR SHALL USE THAT POINT TO INSTALL AN AIR RELIEF VALVE

PROP. 8" D.I. WATER MAIN SERVICE

GATE

PLANTER

12" RCP

SEWER MANHOLE INV. 3.1' DEEP

ABANDONED AND FILLED

MHSA RIM:144.4

UCOV RIM:145.6

UP/R 2/3

GUY WIRE

RIP RAP

WSO

CH2A–18S

CH2A–17S

CH2A–16S

CH2A–15S

CH2A–14S

CH2A–13S

CH2A–12S

CH2A–11S

CH2A–10S

CH2A–18N

CH2A–17N

CH2A–15N

CH2A–14N

CH2A–13N

CH2A–12N

CH2A–11N

CH2A–10N

WF CH2A–13S

WF B

WF B–27

WF B–16

WF B–14

WF B–13

WF B–12

WF B–11

WF B–10

FFE 147.8'

FFE 147.9'

BAY 147.83

BAY 147.86

WHYD

HYDW

GM

GS

BOL

VENT

CONC WALK

HCP PARKING

STONE AREA

SEWER MANHOLE INV. 3.6' DEEP

OIL TANK

SHED

GRAVEL AREA

LEDGE

ROCKS

SFM

GAS

W

E

S

SPRV

MHE RIM:145.5

MHSA RIM:143.7
INV. (A)=139.9
INV. (B)=139.8
INV. (C)=139.9
INV. (D)=139.9

4" C.I.

6"PVC

8"W

12" RCP

Date	Description	No.
	Revisions	
2.23.2021	REVISED PER PEER REVIEW COMMENTS	3
1.29.2021	REVISED PER PEER REVIEW COMMENTS	2
1.04.2021	REVISED PER PEER REVIEW COMMENTS	1

2-23-2021

COMMONWEALTH OF MASSACHUSETTS
GABRIEL R. CROCKER
CIVIL
No. 47917
REGISTERED PROFESSIONAL ENGINEER

GABRIEL R. CROCKER
PROFESSIONAL ENGINEER, MA REGISTRATION #47917

Crocker Design Group
2 SHARP STREET, UNIT B
HINGHAM, MA 02043
P: 781–919–0808

Project

WAREHOUSE BUILDING

60 RESEARCH RD AND 73 ABINGTON STREET, HINGHAM, MA

Prepared for

GILL RESEARCH DRIVE LLC.

60 RESEARCH RD , HINGHAM, MA

Drawing Title

UTILITIES PLAN (SHEET 2 OF 2)

Project No.	100-102
Date	10.19.2020
Scale	1"=30'
Drawn By	AS
Approved By	GC

Drawing No.

C-4.2

30 15 0 30 60

C:\CDG\Crocker Design Group, LLC\Gabriel Crocker - Projects\100-102 Hingham - 75 Abington St\dwg\Plot Sheets\Site Plan Application\ C-4.2 UTIL PLAN.dwg, C-4.2 UTIL, Feb 23, 2021 21:50

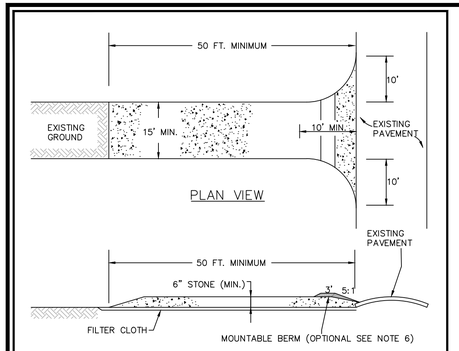

CROSS SECTION

CONSTRUCTION SPECIFICATIONS:

1. STONE SIZE–USE 2" STONE, OR RECLAIMED OR RECYCLED CONCRETE EQUIVALENT.
2. LENGTH–RECOMMEND GREATER THAN OR EQUAL TO 50 FEET WHERE SOILS ARE SANDS AND GRAVELS AND 100 FEET IN SILTS AND CLAYS.
3. THICKNESS–NOT LESS THAN SIX (6) INCHES.
4. WIDTH–FIFTEEN (15) FOOT MINIMUM, BUT NOT LESS THAN THE FULL WIDTH AT POINTS WHERE INGRESS OF EGRESS OCCURS.
5. FILTER CLOTH–SHALL BE PLACED OVER THE ENTIRE AREA PRIOR TO PLACING OF STONE.
6. SUFACE WATER–ALL SURFACE WATER FLOWING OR DIVERTED TOWARD CONSTRUCTION ENTRANCES SHALL BE PIPED ACROSS THE ENTRANCE. IF PIPING IS IMPRACTICAL, A MOUNTABLE BERM SHALL BE INSTALLED.
7. MAINTENANCE– THE ENTRANCE SHALL BE MAINTAINED IN A CONDITION WHICH SHALL PREVENT TRACKING OF FLOWING OF SEDIMENT ONTO PUBLIC RIGHTS–OF–WAY. THIS MAY REQUIRE PERIODIC TOP DRESSING WITH ADDITIONAL STONE AS CONDITIONS DEMAND AND REPAIR OR CLEANOUT OF ANY MEASURES USED TO TRAP SEDIMENT. ALL SEDIMENT SPILLED, DROPPED, WASHED OR TRACKED ONTO PUBLIC RIGHTS–OF–WAY MUST BE REMOVED IMMEDIATELY.
8. PERIODIC INSPECTION AND NEEDED MAINTENCE SHALL BE PROVIDED.

CONSTRUCTION ENTRANCE

NOT TO SCALE

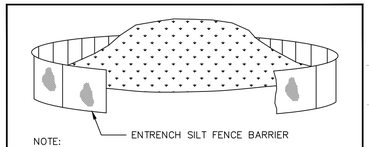

NOTE:

STABILIZE STOCKPILE WITH ANNUAL RYEGRASS, MULCH OR EROSION CONTROL BLANKETS.

SOIL STOCKPILE

NOT TO SCALE

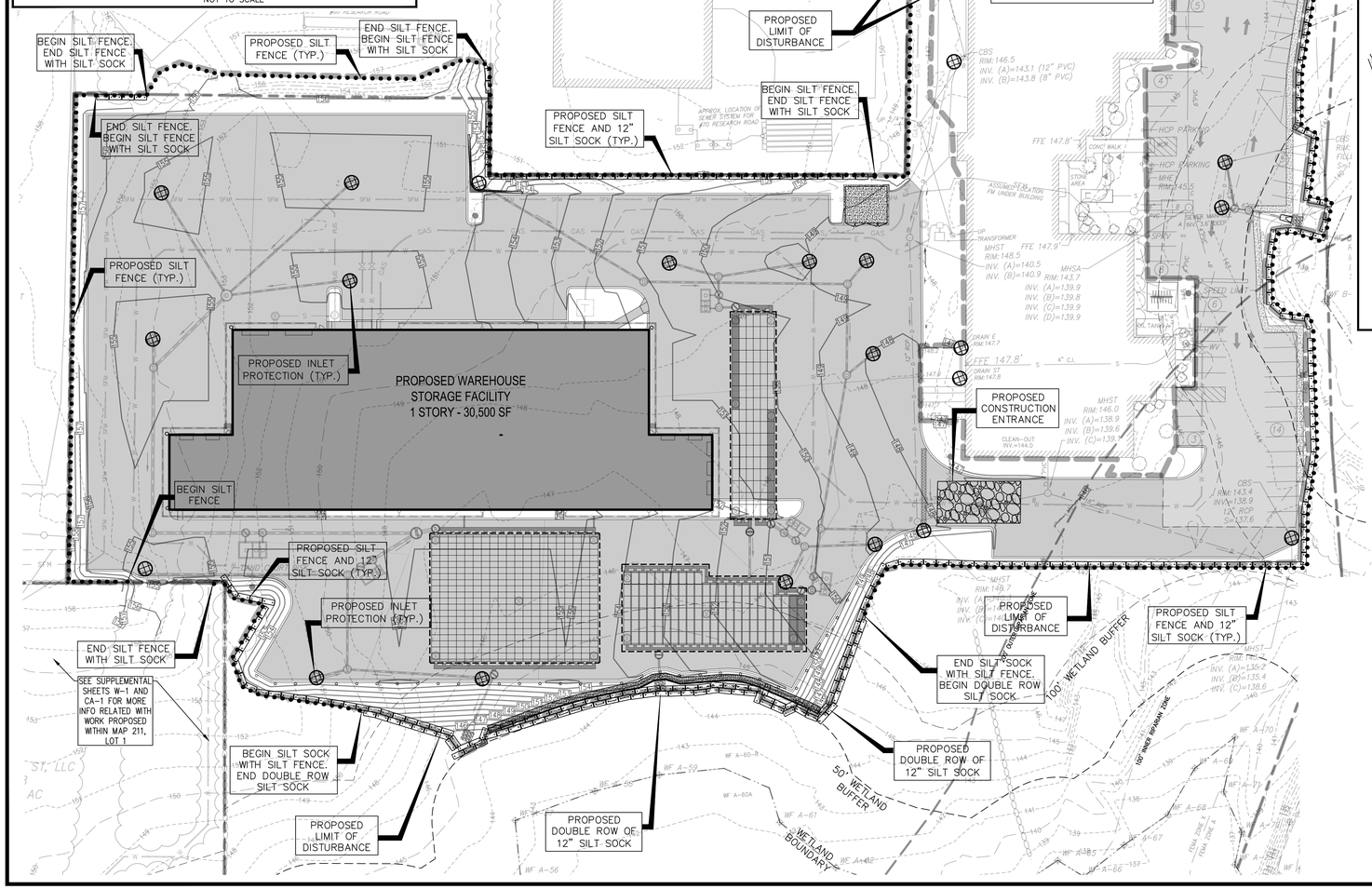

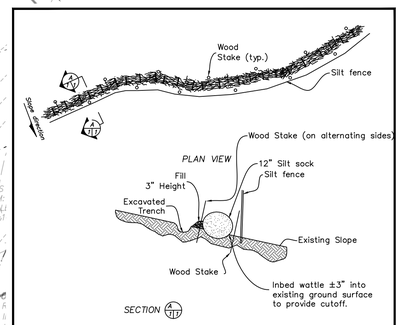

12" SILT SOCK / SILT FENCE DETAIL

NOT TO SCALE

LEGEND

- PROPOSED LIMIT OF DISTURBANCE
- PROPOSED 12" SILT SOCK ROW
- PROPOSED SILT FENCE
- PROPOSED CONSTRUCTION ENTRANCE
- PROPOSED INLET PROTECTION (SILT SACK OR EQUAL)

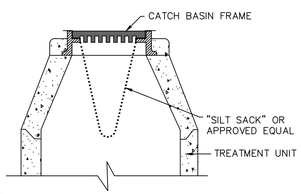

NOTES:
1. TO BE INSTALLED IN ALL GRATED TREATMENT UNITS AFTER INSTALLATION AND UNTIL COMPLETION OF CONSTRUCTION.
2. BOOT ADAPTER MAY BE TRIMMED TO SIZE.

"SILT SACK" FILTER BAG

(N.T.S.)

(CONTINUATION OF GENERAL NOTES)

10. ALL SIDE SLOPES SHALL BE SEEDED WITH GRASS OR INSTALL JUTE NETTING TO PREVENT EROSION.

11. MAINTENANCE: EROSION CONTROLS SHALL BE REPAIRED OR REPLACED AS INSPECTION DEEMS NECESSARY OR AS DIRECTED BY THE ENGINEER OR ARCHITECT. ACCUMULATED SILT AT ANY EROSION CONTROL DEVICE SHALL BE REMOVED WHEN IT REACHES A DEPTH OF 6", AND SHALL BE DISTRIBUTED ON–SITE IN A MANNER NOT CONTRIBUTING TO ADDITIONAL SILTATION.

12. INSPECTIONS: INSPECTIONS ARE TO BE PERFORMED BY QUALIFIED PERSONNEL. DISTURBED AREAS THAT HAVE NOT BEEN FINALLY STABILIZED, AREAS USED FOR STORAGE, STRUCTURAL CONTROL MEASURES, AND LOCATIONS WHERE VEHICLES ENTER OR EXIT THE SITE, MUST BE INSPECTED ONCE EVERY 7 DAYS AND WITHIN 24 HOURS OF A STORM EVEN OF 0.5 INCHES OR GREATER. STABILIZED AREAS ARE TO BE INSPECTED ONCE PER MONTH DISTURBED AREAS AND STORAGE AREAS EXPOSED TO PRECIPITATION SHALL BE INSPECTED FOR EVIDENCE OF OR POTENTIAL FOR POLLUTANTS ENTERING THE DRAINAGE SYSTEM. CONTROL MEASURES SHALL BE OBSERVED TO ENSURE THEY ARE WORKING PROPERLY. DISCHARGE LOCATIONS AND POINTS SHALL BE INSPECTED TO ASCERTAIN WHETHER CONTROLS ARE PREVENTING SIGNIFICANT IMPACT. BASED ON THE RESULTS OF THE ABOVE INSPECTIONS, ANY NECESSARY CHANGES TO THE PLAN WILL BE MADE WITHIN 7 DAYS OF THE INSPECTION AND SUBMITTED TO THE TOWN..... PLANNING BOARD. THE CHANGES MUST BE IMPLEMENTED IN THE FIELD BEFORE THE NEXT STORM EVEN IF PRACTICABLE, OTHERWISE AS SOON AS POSSIBLE.

13. INSTALL AND MAINTAIN CATCH BASIN INSERTS IN ALL PROPOSED AND EXISTING CATCH BASINS.

14. STOCKPILES ARE TO BE AT LEAST 100 FEET FROM WETLAND AREAS. STOCKPILES NOT TO BE REUSED WITHIN 30 DAYS ARE TO BE STABILIZED WITH SEED OR MULCH.

15. CONTRACTOR TO MAINTAIN WITHIN LIMITS OUTSIDE NSTAR EASEMENT EXCEPT FOR SPECIFIC AREAS IDENTIFIED TO BE DISTURBED WITHIN EASEMENT.

16. POTENTIAL STOCK PILE AREAA TO BE PROTECTED WITH EROSION CONTROL MEASURES.

17. THE CONTRACTOR SHALL HAVE A WATER TRUCK ON–SITE AT ALL TIMES AND SHALL PROVIDE TEMPORARY PLANTINGS OR OTHER COVERINGS SUCH AS WOOD CHIPS TO MINIMIZE THE AMOUNT OF DUST LEAVING THE PREMISES.

CONSTRUCTION PHASING

1. BELOW IS PRESENTED A GENERAL CONSTRUCTION PHASING. A MORE DETAILED SCHEDULE IS PRESENTED IN THE STORMWATER POLLUTION PREVENTION PLAN (SWPPP).

2. EROSION AND SEDIMENTATION CONTROL MEASURES INCLUDING SILT SOCKS AND SILT FENCE WILL BE INSTALLED. CONTRACTOR SHALL INSPECT CONTROL MEASURES MONTHLY AND AFTER RAIN EVENTS OF 0.5" OR GREATER.

3. THE PROJECT AREA WILL BE CLEARED OF DEBRIS AND BOULDERS. MATERIAL REMOVED FROM THE SITE WILL BE TRANSPORTED TO AN APPROPRIATE FACILITY OR WILL BE DISPOSED OF ELSEWHERE ACCORDING TO FEDERAL, STATE, AND LOCAL GUIDELINES. INACTIVE STOCKPILES OR AREAS OF GRANULAR MATERIAL OR TOPSOIL SHALL BE TEMPORARILY SEEDED OR MULCHED IN ORDER TO CONTROL SEDIMENT LADEN RUNOFF.

4. CONTRACTOR IS RESPONSIBLE TO SET OUT UTILITIES AND ANY NECESSARY GRADES.

5. GRADING OF SITE INCLUDING BUILDING PADS, PARKING AREAS, AND DETENTION BASINS AND DIGGING OF UTILITY TRENCHES TO DEFINED INVERT LEVELS. MATERIAL TO BE STORED ON AN UNUSED SITE AREA FOR FILL OR PROPERLY REMOVED FROM THE JOB SITE. IF SUITABLE TOPSOIL IS FOUND, IT WILL BE REMOVED AND STOCKPILED IN AN UPLAND AREA AT LEAST 100' FROM WETLANDS TO BE REUSED AS TOPSOIL ON THE PROJECT.

6. PLACING OF FILL OR SUITABLE MATERIAL ON ALL ACCESS ROADS FOR EASY ACCESS. SETTING OUT OF FOUNDATIONS AND SURROUNDING ROADS.

7. LAYING OF ALL UTILITIES INCLUDING DRAINAGE PIPES AND STRUCTURES FOLLOWED BY BACK–FILL, TAKING CARE TO LEAVE ONLY TRENCHES BEING WORKED ON OPEN.

8. FINE GRADING FOR THE PARKING AREAS, ROADWAYS, AND DRAINAGE BASINS TO BE COMPLETED.

9. DRAINAGE BASIN VEGETATION TO BE ESTABLISHED PRIOR TO DISCHARGE FROM CONSTRUCTED DRAINAGE STRUCTURES.

10. ONCE THE DRAINAGE STRUCTURES ARE INSTALLED, PROVIDE PROTECTION AT ALL CATCH BASINS AND INLETS TO PREVENT SEDIMENT FROM ENTERING THE DRAINAGE SYSTEM.

11. INSTALL BINDER COURSE AND SPREAD TOPSOIL AS NEEDED.

12. LIGHT POLES, SIGNAGE, ETC. WILL BE INSTALLED.

13. INSTALL TOP COURSE OF PAVING AND SIDEWALK.

14. THE FINAL PHASE OF CONSTRUCTION IS RESTORATION AND STABILIZATION OF ALL EXPOSED SURFACES. DISTURBED AREAS SHALL BE LANDSCAPED OR SEEDED (SEE ADDITIONAL DISCUSSION IN SWPPP). IN THE EVENT THAT WEATHER CONDITIONS PREVENT FINAL STABILIZATION, TEMPORARY EROSION AND SEDIMENTATION MEASURES WILL BE EMPLOYED UNTIL THE TEMPERATURE AND WEATHER IS SUITABLE FOR GRASS GROWING. A FINAL INSPECTION WILL ENSURE THAT THE SITE IS CLEARED OF ALL PROJECT DEBRIS AND THAT EROSION AND SEDIMENTATION CONTROLS ARE FUNCTIONING PROPERLY. SILT SOCK AND SILT FENCE WILL REMAIN IN PLACE UNTIL THE SITE IS FULLY STABILIZED AND THE SITE HAS PASSED FINAL INSPECTION. VEGETATION IS TO BE OF A UNIFORM DENSITY OF AT LEAST 75% FOR ACCEPTANCE.

GENERAL NOTES

1. CONTRACTOR TO ABIDE BY PROVISIONS OF EPA NOI NPDES STORMWATER POLLUTION PREVENTION PLAN (SWPPP) AND BY STORMWATER MANAGEMENT OPERATION AND MAINTENANCE PLAN AS PREPARED BY COLER & COLANTONIO, INC.

2. ALL TEMPORARY STOCKPILE AREAS SHALL HAVE EROSION CONTROLS (HAYBALES AND SILT FENCE) AROUND THE PERIMETER.

3. UNDERGROUND UTILITIES MAY EXIST THAT ARE NOT SHOWN ON THIS PLAN. DIG SAFE MUST BE NOTIFIED (1–800–344–7233) AT LEAST 72 HOURS PRIOR TO ANY CONSTRUCTION.

4. ALL SEDIMENTATION AND EROSION CONTROL MEASURES SHALL BE MAINTAINED THROUGHOUT THE CONSTRUCTION PERIOD. SEDIMENTATION AND EROSION CONTROL MEASURES SHALL BE IN PLACE AND OBSERVED PRIOR TO ANY WORK STARTING ON THE PROJECT.

5. SITE ENTRY AND EXIT LOCATIONS SHALL BE MAINTAINED IN A CONDITION WHICH WILL PREVENT TRACKING OR FLOWING OF SEDIMENT ONTO PUBLIC ROADWAYS. ALL SEDIMENT SPILLED, DROPPED, WASHED OR TRACKED ON A PUBLIC ROADWAY MUST BE REMOVED IMMEDIATELY. WHEN WASHING IS REQUIRED TO REMOVE SEDIMENT PRIOR TO ENTRANCE TO A PUBLIC ROADWAY, IT SHALL BE DONE ON AN AREA STABILIZED WITH CRUSHED STONE WHICH DRAINS INTO AN APPROVED SEDIMENT BASIN. ALL FINES IMPOSED FOR TRACKING ONTO PUBLIC ROADS SHALL BE PAID BY THE CONTRACTOR.

6. TEMPORARY SEEDING OR OTHER METHOD OF STABILIZATION SHALL BE INITIATED WITHIN 14 DAYS OF THE LAST DISTURBANCE ON ANY AREA OF THE SITE, UNLESS ADDITONAL CONSTRUCTION OF THE AREAS IS EXPECTED WITHIN 21 DAYS OF THE LAST DISTURBANCE.

7. UPON COMPLETION OF FINE GRADING, ALL AREAS NOT OTHERWISE PERMANENTLY STABILIZED SHALL BE SEEDED AND MAINTAINED UNTIL A UNIFORM COVERAGE OF 75%± MINIMUM DENSITY, AS DETERMINED BY THE OWNER'S REPRESENTATIVE, IS ACHIEVED.

8. MAINTENANCE – EROSION CONTROLS SHALL BE REPAIRED OR REPLACED AS INSPECTION DEEMS NECESSARY OR AS DIRECTED BY THE ENGINEER OR ARCHITECT. ACCUMULATED SILT AT ANY EROSION CONTROL DEVICE SHALL BE REMOVED WHEN IT REACHES A DEPTH OF 6", AND SHALL BE DISTRIBUTED ON–SITE IN A MANNER NOT CONTRIBUTING TO ADDITIONAL SILTATION.

9. ANY CONTRACTOR IS RESPONSIBLE FOR REESTABLISHING ANY EROSION CONTROL DEVICE WHICH HE DISTURBS. EACH CONTRACTOR SHALL NOTIFY THE ENGINEER/ARCHITECT OF ANY DEFICIENCIES IN THE ESTABLISHED EROSION CONTROL MEASURES WHICH MAY LEAD TO UNAUTHORIZED DISCHARGE OR STORM WATER POLLUTION, SEDIMENTATION OR OTHER POLLUTANTS. UNAUTHORIZED POLLUTANTS INCLUDE, BUT ARE NOT LIMITED TO, EXCESS CONCRETE DUMPING OR CONCRETE RESIDUE, PAINTS, SOLVENTS, GREASE, FUEL, AND LUBE OIL, PESTICIDES, ANY SOLID WASTE MATERIALS.

40 20 0 40 80

Date	Description	No.
2.23.2021	REVISED PER PEER REVIEW COMMENTS	3
1.29.2021	REVISED PER PEER REVIEW COMMENTS	2
1.04.2021	REVISED PER PEER REVIEW COMMENTS	1

Revisions

2-23-2021

COMMONWEALTH OF MASSACHUSETTS GABRIEL R. CROCKER CIVIL No. 47917 REGISTERED PROFESSIONAL ENGINEER

GABRIEL R. CROCKER
PROFESSIONAL ENGINEER, MA REGISTRATION #47917

Crocker Design Group
2 SHARP STREET, UNIT B
HINGHAM, MA 02043
P: 781–919–0808

Project

WAREHOUSE BUILDING

60 RESEARCH RD AND 73 ABINGTON STREET, HINGHAM, MA

Prepared for

GILL RESEARCH DRIVE LLC.

60 RESEARCH RD , HINGHAM, MA

Drawing Title

SOIL EROSION AND SEDIMENT CONTROL PLAN

Project No.	100-102
Date	10.19.2020
Scale	1"=40'
Drawn By	AS
Approved By	GC

Drawing No. **C-5**

C:\CDG\Crocker Design Group, LLC\Gabriel Crocker - Projects\100-102 Hingham - 73 Abington St\dwg\Plot Sheets\Site Plan Application\ - 06 SESC PLAN.dwg, C-5 SESC, Feb 23, 2021 21:50

PLANTING NOTES:

1. ALL PLANT MATERIAL SHALL CONFORM TO THE MINIMUM GUIDELINES ESTABLISHED BY THE AMERICAN STANDARD FOR NURSERY STOCK PUBLISHED BY THE AMERICAN ASSOCIATION OF NURSERYMEN, INC.
2. ALL PLANTING BEDS TO BE FILLED WITH SOIL AND CROWNED ABOVE ADJACENT LAWN OR IMPROVED AREAS.
3. ALL PLANTING BEDS TO BE MULCHED WITH AGED HARDWOOD BARK MULCH TO A DEPTH OF THREE (3) INCHES. PROVIDE FIVE (5) FOOT DIAMETER MULCH CIRCLE AROUND ALL INDIVIDUAL TREE PLANTINGS AND CONTINUOUS MULCH BED AROUND SHRUB PLANTINGS.
4. PLANT MATERIALS SHALL BEAR SAME RELATIONSHIP TO FINISH GRADE AS THEY BORE TO GRADE IN THE NURSERY.
5. SPACE PLANTS AT SCALED DISTANCES SHOWN ON DRAWINGS UNLESS OTHERWISE DETERMINED IN FIELD FOR SCREENING PURPOSES.
6. ANY PROPOSED SUBSTITUTION OF PLANT MATERIAL SHALL ONLY BE MADE AFTER PRIOR APPROVAL OF LANDSCAPE ARCHITECT OR OWNER'S REPRESENTATIVE.
7. ALL PLANT MATERIALS SHALL BE GUARANTEED FOR ONE YEAR FOLLOWING DATE OF FINAL WRITTEN ACCEPTANCE FROM THE OWNER OR HIS REPRESENTATIVE.
8. WARM SEASON GRASS MIX AREAS DEFICTED HEREIN SHALL NOT BE CONSTRUED AS THE FULL EXTENT REQUIRED. IN ADDITION TO AREAS INDICATED HEREIN, THE CONTRACTOR IS RESPONSIBLE FOR PROVIDING WARM SEASON GRASS MIX FOR ALL STRIPPED GRAVEL PIT AREAS AND ALL AREAS DISTURBED DURING CONSTRUCTION WHICH MAY BE BEYOND THOSE INDICATED HEREIN.

SOIL NOTES:

1. ALL AREAS DISTURBED BY CONSTRUCTION NOT DESIGNATED TO RECEIVE OTHER TREATMENT SHALL BE LOAMED A MINIMUM DEPTH AS SPECIFIED BELOW. TOPSOIL FOR THIS PURPOSE SHALL BE TESTED BY AN APPROVED SOIL TESTING LABORATORY AND SHALL MEET THE FOLLOWING MINIMUM STANDARDS:
   a)TEXTURE: FINE SANDY LOAM OR SANDY LOAM, AS DETERMINED BY MECHANICAL ANALYSIS AND
   BASED ON THE USDA STANDARD SOIL CLASSIFICATION SYSTEM.
   b)ACIDITY: SOIL REACTION SHALL BE IN THE RANGE OF 5.5 TO 7.6, OR SHALL BE AMENDED TO
   MEET THIS RANGE.
   c)ORGANIC MATTER: TOPSOIL SHALL HAVE A RANGE BETWEEN 10% AND 20% ORGANIC MATTER
   CONTENT BASED ON THE LOSS ON IGNITION OF OVEN-DRIED SAMPLES.

TOPSOIL SHALL BE SPREAD TO A MINIMUM DEPTH OF SIX (6) INCHES AFTER SETTLING ON ALL TURFGRASS LAWN AREAS ADJACENT TO THE BUILDING, AS INDICATED IN THE PROJECT LEGEND. TOPSOIL SHALL BE SPREAD TO A MINIMUM DEPTH OF FOUR (4) INCHES AFTER SETTLING ON ALL GRAVEL PIT RECLAMATION AREAS, WARM SEASON GRASS MIX AREAS AND OTHER DISTURBED AREAS.
PLANTING MIX: MIX THE SPECIFIED MATERIALS ON-SITE IN THE FOLLOWING PROPORTIONS:

3 PARTS TOPSOIL AS SPECIFIED ABOVE, 1 PART PEAT MOSS, 1 PART SAND, WITH 5 POUNDS OF SUPERPHOSPHATE/CUBIC YARD OF MIXTURE (ONLY IF PLANTS ARE INSTALLED IN SPRING). ALL AMENDMENTS SHALL BE THOROUGHLY INCORPORATED INTO MIXTURE TO ASSURE UNIFORM DISTRIBUTION. PLANTING MIX SHALL BE USED TO BACKFILL ALL TREE AND SHRUB PLANTING HOLES AS INDICATED IN THE PLANTING DETAILS, AND SHALL BE SPREAD TO A MINIMUM DEPTH OF FOUR (4) INCHES.

BASIN MIX: MIX THE SPECIFIED MATERIALS ON-SITE IN THE FOLLOWING PROPORTIONS:
1 PART TOPSOIL, 1 PART PEAT MOSS, 1 PART SAND, WITH 5 POUNDS OF SUPERPHOSPHATE/CUBIC YARD OF MIXTURE. (ONLY IF PLANTS ARE INSTALLED IN SPRING). ALL AMENDMENTS SHALL BE THOROUGHLY INCORPORATED INTO MIXTURE TO ASSURE UNIFORM DISTRIBUTION.

BASIN MIX SHALL BE SPREAD TO A MINIMUM DEPTH OF SIX (6) INCHES AFTER SETTLING ON ALL DETENTION BASIN BOTTOMS AND SLOPES.

SEED MIX NOTES:

1. SEED ALL TURFGRASS LAWN AREAS, AS INDICATED IN THE PROJECT LEGEND, WITH A DROUGHT TOLERANT, HIGH-FESCUE TURFGRASS SEED MIX SUCH AS PEARL'S PREMIUM GRASS SEED BY FEARL'S PREMIUM, WAYLAND, MA; ENVIROTURF BY BLUESTEM NURSERY, LAURER, WA; ECO-LAWN BY WILDFLOWER FARM, COLDWATER, ONT, CAN; OR APPROVED EQUAL, APPLIED AT SEED PRODUCER'S RECOMMENDED RATE.
2. SEED ALL STORMWATER DETENTION BASIN AREAS WITH "NEW ENGLAND EROSION CONTROL/ RESTORATION MIX FOR DETENTION BASINS AND MOIST SITES" BY NEW ENGLAND WETLAND PLANTS OR APPROVED EQUAL, PER MANUFACTURER'S RECOMMENDATIONS.
3. SEED ALL GRAVEL PIT RESTORATION AREAS AND OTHER DISTURBED AREAS WITH "NEW ENGLAND NATIVE WARM SEASON GRASS MIX" BY NEW ENGLAND WETLAND PLANTS, AMHERST, MA, OR APPROVED EQUAL, PER MANUFACTURER'S RECOMMENDATIONS. WARM SEASON SEEDING PROGRAM WILL LIKELY TAKE 2-3 GROWING SEASONS UNTIL GOOD GROWTH IS ESTABLISHED. RESTORATION OF ALL GRAVEL PIT RESTORATION AREAS SHALL BE UNDERTAKEN IN ACCORDANCE WITH THE MASSACHUSETTS EROSION AND SEDIMENT CONTROL GUIDELINES FOR URBAN AND SUBURBAN AREAS, BEST MANAGEMENT PRACTICES FOR SAND AND GRAVEL PITS, MASSACHUSETTS DEPARTMENT OF ENVIRONMENTAL PROTECTION, MAY, 2003.
4. MULCH ALL SEEDED AREAS WITH 500-700 LBS. OF SALTMARSH HAY OR WEED-FREE STRAW PER ACRE, SPREAD EVENLY. ALL SLOPES OF 3:1 OR GREATER, AFTER BEING LOAMED, SEEDED, AND MULCHED, SHALL BE COVERED WITH JUTE OR BIODEGRADABLE COCONUT MATTING SECURELY ANCHORED TO THE SLOPE. OVERLAP A NETTING JOINTS A MINIMUM OF 4" AND SECURE WITH A DOUBLE ROW OF STAPLES."
5. MAINTENANCE OF SEED AREAS SHALL CONSIST OF WATERING, WEEDING, CURING, REPAIR OF ALL EROSION, AND RESEEDING AS NECESSARY TO ESTABLISH A UNIFORM STAND OF GRASS LAWNS SHALL BE WATERED IN A SATISFACTORY MANNER DURING AND IMMEDIATELY AFTER PLANTING, AND NOT LESS THAN TWICE PER WEEK UNTIL FINAL ACCEPTANCE. ALL AREAS WHICH FAIL TO SHOW A UNIFORM STAND OF GRASS FOR ANY REASON SHALL BE RESEEDED REPEATEDLY UNTIL A UNIFORM STAND IS ATTAINED.
6. HYDROSEEDING IS AN ACCEPTABLE ALTERNATE METHOD OF SEEDING, IF UNDERTAKEN IN ACCORDANCE WITH THE FOLLOWING SPECIFICATIONS:

-MATERIALS FOR HYDROSEEDING SHALL INCLUDE TACKIFIER, WOOD CELLULOSE FIBER MULCH, FERTILIZER, GROUND LIMESTONE AND WATER.
-PROVIDE JUTE MATTING OR BIODEGRADABLE TOBACCO NETTING ON ALL SLOPES EQUAL TO OR GREATER THAN 3:1. JUTE MATTING SHALL BE C-JUTE BY CONTECH CONSTRUCTION PRODUCTS, INC, GEOJUTE BY BELTON INDUSTRIES OR APPROVED EQUAL.*
-IF PROJECT SCHEDULE REQUIRES SEEDING TO BE PERFORMED AFTER OCTOBER 15 UNTIL MARCH 31, THE FOLLOWING IS REQUIRED. AFTER HYDROSEEDING/SEEDING, THOSE VEGETATED AREAS WHICH HAVE A SLOPE EQUAL TO OR STEEPER THAN 4:1 SHALL BE COVERED WITH JUTE MATTING AND STAPLED IN PLACE PER MANUFACTURERS REQUIREMENTS. PRECAUTIONS SHALL BE TAKEN TO MINIMIZE DISTURBANCE OF THE HYDROSEEDED WHEN INSTALLING THE JUTE.*
-HYDROSEEDING/ SEEDING MIXTURE:
-TACKIFIER:
APPLY AT A RATE OF 60 GALLONS PER ACRE.
-WOOD CELLULOSE FIBER MULCH:
APPLY AT A RATE OF 2,000 POUNDS PER ACRE.
-APPLY FERTILIZER AND LIMESTONE AT RATES DETERMIINED BY SOIL ANALYSIS.

*STRAW MULCH AND NETTING ON SLOPES 3:1 OR GREATER IS NOT REQUIRED ON HYDROSEEDING OPERATIONS IF SLOPES ARE SPRAYED WITH A BONDED FIBER MATRIX MULCH, SUCH AS FLEXTERRA BY PROFILE PRODUCTS, LLC, HYDROSTRAW BFM BY HYDROSTATION, INC., OR APPROVED EQUAL, INSTALLED IN ACCORDANCE WITH MANUFACTURER'S SPECIFICATIONS.

TREE REMOVAL AND MITIGATION NOTES:

1. HINGHAM TREE REMOVAL AND REPLACEMENT POLICY REQUIRES 1 TO 1 TREE REPLACEMENT FOR TREES REMOVED FROM THE 100' BUFFER ZONE TO THE BORDERING VEGETATED WETLANDS. BASED ON A SITE INSPECTION, WE ESTIMATED THIS PLAN INCLUDES THE REMOVAL OF 38 TREES. THIS PLAN INCLUDES THE REPLANTING OF 38 TREES WITHIN THE SOUTHERN END OF THE PROJECT (THE PORTION OF THE PROJECT CLOSEST TO THE RESOURCE AREAS), THUS SATISFYING THE POLICY REQUIREMENT FOR TREE REPLACEMENT.
2. AREAS SEEDED OR PLANTED WITH MITIGATION PLANTINGS WITHIN THE BUFFER ZONE/RESOURCE AREA SHALL NOT BE MOWED OR MAINTAINED AS LANDSCAPE BEDS.

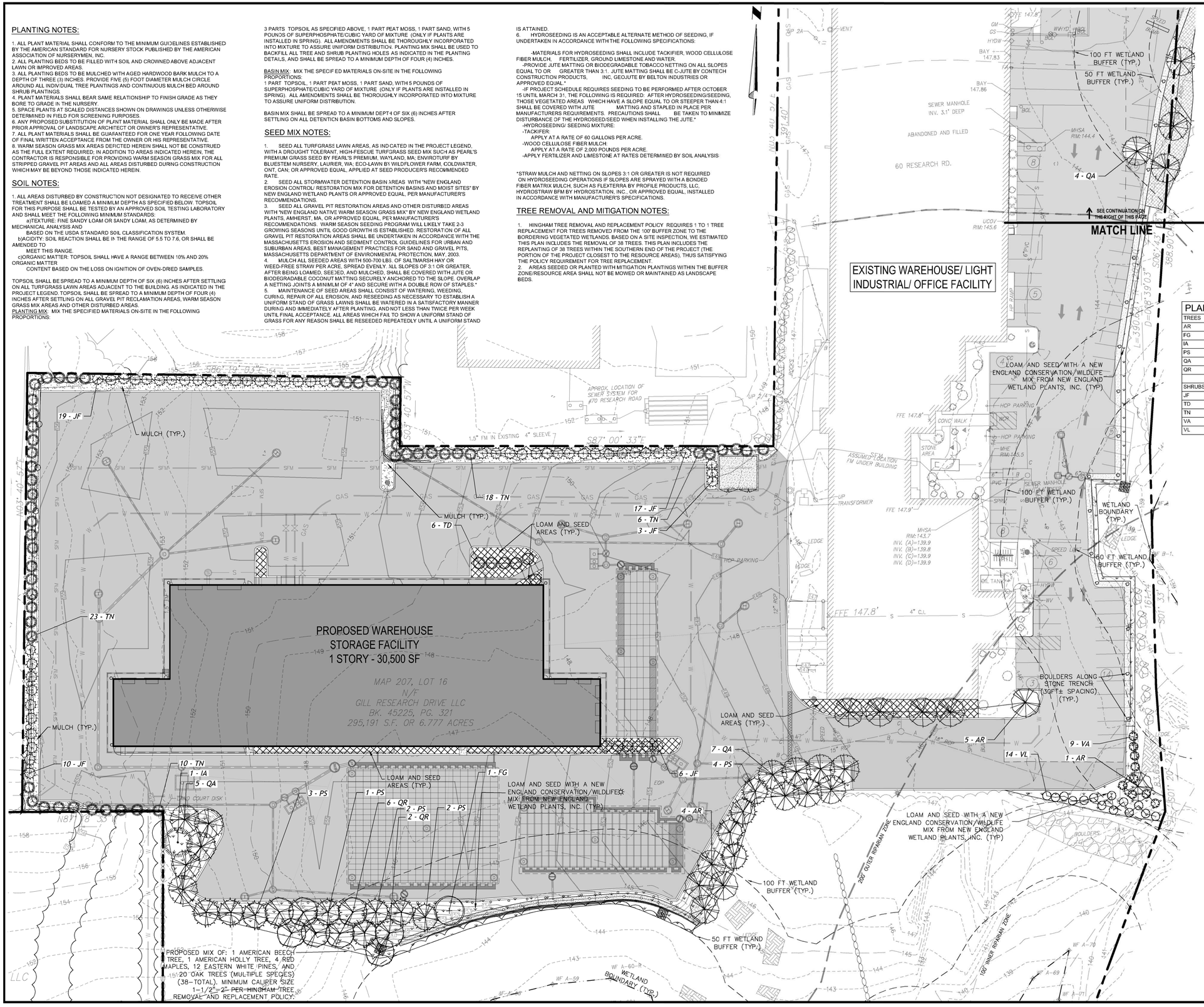

PLANT SCHEDULE

TREES	QTY	BOTANICAL NAME	COMMON NAME	SIZE	CONTAINER
AR	10	ACER RUBRUM	RED MAPLE	3" CAL.	B&B
FG	1	FAGUS GRANDIFOLIA	AMERICAN BEECH	3" CAL.	B&B
IA	1	ILEX OPACA	AMERICAN HOLLY	8` HT.	B&B
PS	12	PINUS STROBUS	WHITE PINE	8` HT.	B&B
QA	16	QUERCUS ALBA	WHITE OAK	3" CAL.	B&B
QR	8	QUERCUS RUBRA	RED OAK	3" CAL.	B&B
SHRUBS	QTY	BOTANICAL NAME	COMMON NAME	SIZE	CONTAINER
JF	55	JUNIPERUS CHINENSIS `SEA GREEN`	SEA GREEN JUNIPER	5` HT.	B&B
TD	6	TAXUS X MEDIA `DENSIFORMIS`	DENSE YEW	18-24" HT.	CONT.
TN	57	THUJA OCCIDENTALIS `NIGRA`	DARK AMERICAN ARBORVITAE	5` HT.	B&B
VA	9	VIBURNUM DENTATUM	VIBURNUM	24-30" HT.	#5 CONT.
VL	14	VIBURNUM LENTAGO	NANNYBERRY	24-30" HT.	#5 CONT.

30 15 0 30 60

Date	Description	No.
2.23.2021	REVISED PER AGENT REVIEW COMMENTS	4
2.13.2021	REVISED PER PEER REVIEW COMMENTS	3
1.29.2021	REVISED PER PEER REVIEW COMMENTS	2
1.04.2021	REVISED PER PEER REVIEW COMMENTS (CDG)	1
	Revisions	

NICHOLAS J SCHWARTZ, 4214, REGISTERED LANDSCAPE ARCHITECT, COMMONWEALTH OF MASSACHUSETTS
2.23.2021

NICHOLAS J. SCHWARTZ, RLA
LANDSCAPE ARCHITECT, MA REGISTRATION #4214

IT IS A VIOLATION OF LAW FOR ANY PERSON, UNLESS THEY ARE ACTING UNDER THE DIRECTION OF A LICENSED PROFESSIONAL ENGINEER, ARCHITECT, LANDSCAPE ARCHITECT OR LAND SURVEYOR TO ALTER AN ITEM IN ANY WAY. IF AN ITEM BEARING THE STAMP OF A LICENSED PROFESSIONAL IS ALTERED, SAID ALTERING PARTY SHALL STAMP THE DOCUMENT AND INCLUDE THE NOTATION "ALTERED BY" FOLLOWED BY THEIR SIGNATURE, THE DATE OF SUCH ALTERATION, AND A SPECIFIC DESCRIPTION OF THE ALTERATION.

CHA
141 Longwater Drive, Suite 104
Norwell, MA 02061-1620
781-982-7700 . www.chacompanies.com

Project
WAREHOUSE BUILDING
60 RESEARCH RD AND 73 ABINGTON STREET, HINGHAM, MA

Prepared for
GILL RESEARCH DRIVE LLC.
60 RESEARCH RD , HINGHAM, MA

Drawing Title
LANDSCAPE PLAN

Project No.	100-102
Date	1.29.2021
Scale	1"=30'
Drawn By	NJS
Approved By	NJS

Drawing No.
C-6.1

M:\100_plans\100-102\Plan Sets\Permit\100-102_LANDSCAPE PLAN.dwg, C-6.1(ARCH D PLAN), Feb 23, 2021 10:16

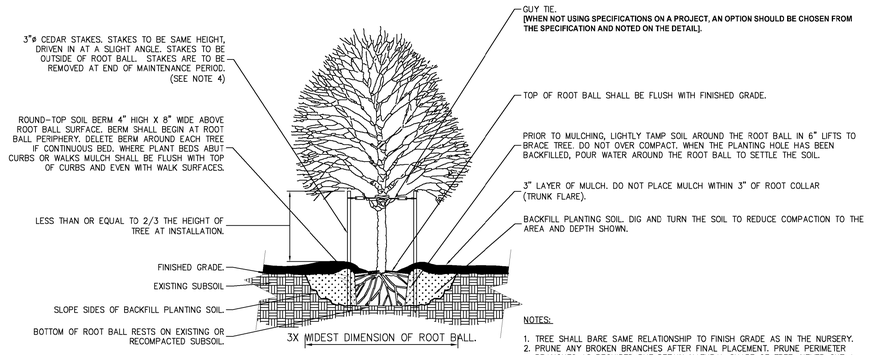

NOTES:

1. TREE SHALL BARE SAME RELATIONSHIP TO FINISH GRADE AS IN THE NURSERY.
2. PRUNE ANY BROKEN BRANCHES AFTER FINAL PLACEMENT. PRUNE PERIMETER BRANCHES AS REQUIRED BUT RETAIN NATURAL SHAPE OF TREE. NEVER CUT A LEADER. PRUNING TO BE PERFORMED BY A QUALIFIED LANDSCAPE PROFESSIONAL.
3. TREE SHALL BE PLUMB AND STRAIGHT.
4. TREES 2 1/2" CAL. OR GREATER SHALL BE GUYED AND STAKED WITH 3 EQUALLY SPACED STAKES.
5. AFTER PLACEMENT AND ROTATION OF TREE, REMOVE ALL ROPES FROM ROOT BALL AND CUT AND REMOVE TOP HALF OF BURLAP. COMPLETELY REMOVE BURLAP IF IT IS MADE OF SYNTHETIC MATERIAL.

DECIDUOUS TREE PLANTING & STAKING DETAIL

NOT TO SCALE

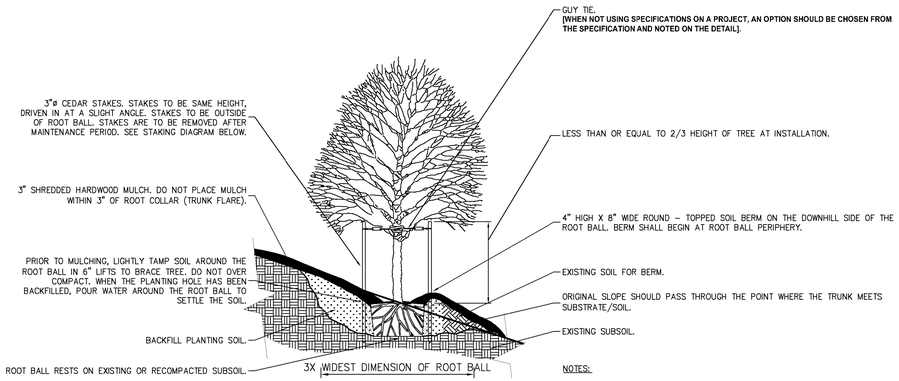

NOTES:

1. TREE SHALL BARE SAME RELATIONSHIP TO FINISH GRADE AS IN THE NURSERY.
2. PRUNE ANY BROKEN BRANCHES AFTER FINAL PLACEMENT. PRUNE PERIMETER BRANCHES AS REQUIRED BUT RETAIN NATURAL SHAPE OF TREE. NEVER CUT A LEADER. PRUNING TO BE PERFORMED BY A QUALIFIED LANDSCAPE PROFESSIONAL.
3. TREE SHALL BE PLUMB AND STRAIGHT.
4. AFTER PLACEMENT AND ROTATION OF TREE, REMOVE ALL ROPES FROM ROOT BALL AND CUT AND REMOVE TOP HALF OF BURLAP.

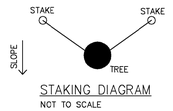

STAKING DIAGRAM

NOT TO SCALE

DECIDUOUS TREE PLANTING & STAKING ON SLOPE (5% TO 50%)

NOT TO SCALE

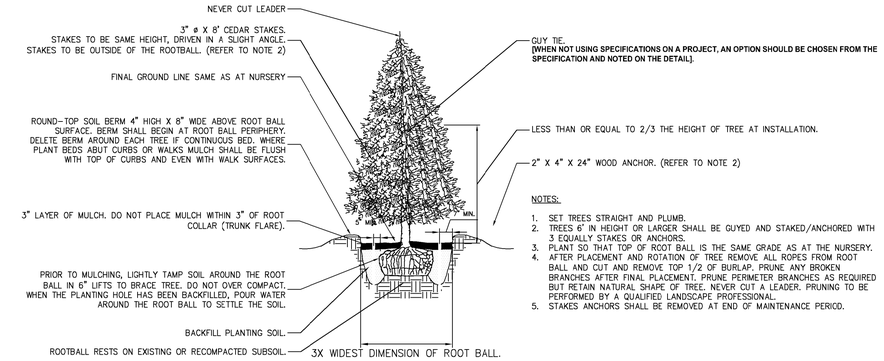

NOTES:

1. SET TREES STRAIGHT AND PLUMB.
2. TREES 6' IN HEIGHT OR LARGER SHALL BE GUYED AND STAKED/ANCHORED WITH 3 EQUALLY STAKES OR ANCHORS.
3. PLANT SO THAT TOP OF ROOT BALL IS THE SAME GRADE AS AT THE NURSERY.
4. AFTER PLACEMENT AND ROTATION OF TREE REMOVE ALL ROPES FROM ROOT BALL AND CUT AND REMOVE TOP 1/2 OF BURLAP. PRUNE ANY BROKEN BRANCHES AFTER FINAL PLACEMENT. PRUNE PERIMETER BRANCHES AS REQUIRED BUT RETAIN NATURAL SHAPE OF TREE. NEVER CUT A LEADER. PRUNING TO BE PERFORMED BY A QUALIFIED LANDSCAPE PROFESSIONAL.
5. STAKES ANCHORS SHALL BE REMOVED AT END OF MAINTENANCE PERICD.

CONIFEROUS TREE PLANTING & STAKING DETAIL

NOT TO SCALE

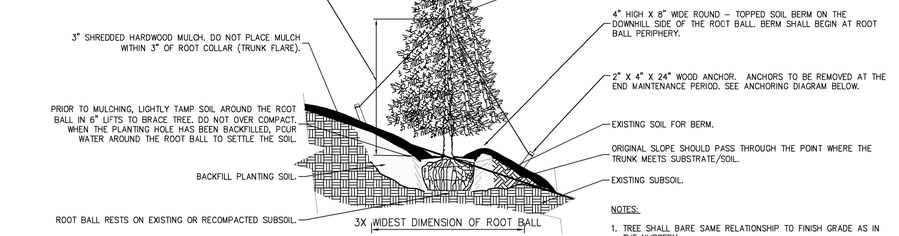

NOTES:

1. TREE SHALL BARE SAME RELATIONSHIP TO FINISH GRADE AS IN THE NURSERY.
2. PRUNE ANY BROKEN BRANCHES AFTER FINAL PLACEMENT. PRUNE PERIMETER BRANCHES AS REQUIRED BUT RETAIN NATURAL SHAPE OF TREE. NEVER CUT A LEADER. PRUNING TO BE PERFORMED BY A QUALIFIED LANDSCAPE PROFESSIONAL.
3. TREE SHALL BE PLUMB AND STRAIGHT.
4. AFTER PLACEMENT AND ROTATION OF TREE, REMOVE ALL ROPES FROM ROOT BALL AND CUT AND REMOVE TOP HALF OF BURLAP.

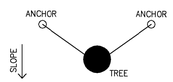

ANCHORING DIAGRAM

NOT TO SCALE

CONIFEROUS TREE PLANTING & STAKING DETAIL ON SLOPE (5% TO 50%)

NOT TO SCALE

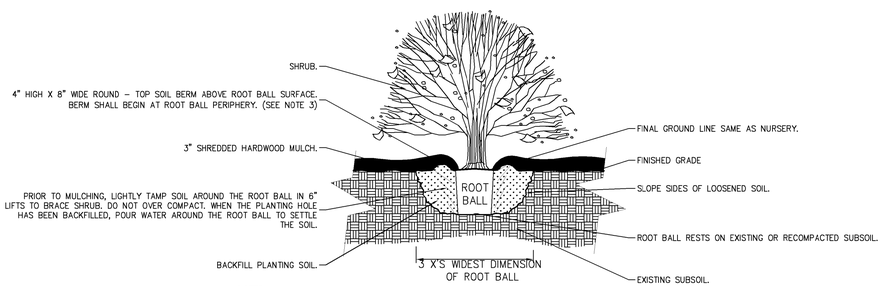

NOTES:

1. MIX PLANTING SOIL IN PLANTING HOLES OR CONTINUOUS BEDS.
2. AFTER PLACEMENT AND ROTATION OF SHRUB REMOVE ALL ROPES FROM ROOT BALL AND CUT AND REMOVE TOP OF BURLAP.
3. DELETE SOIL BERM AROUND EACH SHRUB IF CONTINUOUS BED. PROVIDE NEAT TRIMMED SOIL EDGE AT CONTINUOUS BEDS AGAINST LAWN. WHERE PLANT BEDS ABUT CURBS OR WALKS MULCH SHOULD BE FLUSH WITH TOP OF CURBS AND EVEN WITH WALK SURFACES.
4. PRUNE BROKEN CANES AFTER PLANTING.

SHRUB PLANTING

NOT TO SCALE

Date	Description	No.
2.23.2021	REVISED PER AGENT REVIEW COMMENTS	4
2.13.2021	REVISED PER PEER REVIEW COMMENTS	3
1.29.2021	REVISED PER PEER REVIEW COMMENTS	2
1.04.2021	REVISED PER PEER REVIEW COMMENTS (CDG)	1
	Revisions	

NICHOLAS J. SCHWARTZ, RLA
LANDSCAPE ARCHITECT, MA REGISTRATION #4214

IT IS A VIOLATION OF LAW FOR ANY PERSON, UNLESS THEY ARE ACTING UNDER THE DIRECTION OF A LICENSED PROFESSIONAL ENGINEER, ARCHITECT, LANDSCAPE ARCHITECT OR LAND SURVEYOR TO ALTER AN ITEM IN ANY WAY. IF AN ITEM BEARING THE STAMP OF A LICENSED PROFESSIONAL IS ALTERED, THE ALTERING PROFESSIONAL SHALL STAMP THE DOCUMENT AND INCLUDE THE NOTATION "ALTERED BY" FOLLOWED BY THEIR SIGNATURE, THE DATE OF SUCH ALTERATION, AND A SPECIFIC DESCRIPTION OF THE ALTERATION.

CHA
141 Longwater Drive, Suite 104
Norwell, MA 02061-1620
781-982-7700 . www.chacompanies.com

Project

WAREHOUSE BUILDING

60 RESEARCH RD AND 73 ABINGTON STREET, HINGHAM, MA

Prepared for

GILL RESEARCH DRIVE LLC.

60 RESEARCH RD , HINGHAM, MA

Drawing Title

LANDSCAPE DETAIL SHEET

Project No. 100-102	Drawing No. C-6.2
Date 1.29.2021	
Scale AS NOTED	
Drawn By NJS	
Approved By NJS	

M:\Old_data\Civil-Site Work\Gill Research Park\Civil_10%\LANDSCAPE PLAN.dwg, C-6 LANDSCAPE DETAIL, Feb 23, 2021 10:48

EXISTING AREA LIGHTS AND WALL MOUNTED LIGHTS ON SITE DEPICTED IN THIS PLAN WERE NOT ANALYZED IN THIS PHOTOMETRIC SITE CALCULATION

PROPOSED WAREHOUSE STORAGE FACILITY
1 STORY - 30,465 SF
PROPOSED FFE=155.5

EXIST. LIGHTING POLE AND FIXTURE TO REMAIN (SEE DEMO PLAN FOR MORE DETAIL)

PROPOSED WALL MOUNTED LIGHT (TYP.)

EXIST. WALL MOUNTED LIGHT TO REMAIN

EXIST. LIGHTING POLE AND FIXTURE TO REMAIN

200' OUTER RIPARIAN ZONE

100' INNER RIPARIAN ZONE

30 15 0 30 60

2.23.2021	REVISED PER PEER REVIEW COMMENTS	3
1.29.2021	REVISED PER PEER REVIEW COMMENTS	2
1.04.2021	REVISED PER PEER REVIEW COMMENTS	1
Date	Description	No.

Revisions

2-23-2021

GABRIEL R. CROCKER
CIVIL
No. 47917
COMMONWEALTH OF MASSACHUSETTS
REGISTERED PROFESSIONAL ENGINEER

GABRIEL R. CROCKER
PROFESSIONAL ENGINEER, MA REGISTRATION #47917

Crocker Design Group
2 SHARP STREET, UNIT B
HINGHAM, MA 02043
P: 781-919-0808

Project
WAREHOUSE BUILDING
60 RESEARCH RD AND 73 ABINGTON STREET, HINGHAM, MA

Prepared for
GILL RESEARCH DRIVE LLC.
60 RESEARCH RD , HINGHAM, MA

Drawing Title
LIGHTING PLAN

Project No.	100-102
Date	10.19.2020
Scale	1"=30'
Drawn By	AS
Approved By	GC

Drawing No.
C-6.3

C:\CDG\Crocker Design Group, LLC\Gabriel Crocker - Projects\100-102 Hingham - 75 Abington St(new)\Plot Sheets\Site Plan Application_07 LIGHTING PLAN.dwg, 05-lighting plan, Feb 23, 2021 21:51

TEST PIT DATA

TEST PITS 1 and 2 NOT PERFORMED DUE
TO CONFLICTS WITH SITE OPERATIONS
SHGW ELEVATION IS CONSIDERED 24" BELOW EXISTING GRADE

156.4 0 & A -LOAM 155.5 B-SANDY LOAM 154.23	TEST PIT 3 GROUND ELEV=156.4 SHGW ELEV=154.4 BOTTOM OF TP=154.23
148.9 0 & A -LOAM 148.15 C-SANDY LOAM 136.4	TEST PIT 4 GROUND ELEV=148.9 SHGW ELEV=146.9 BOTTOM OF TP=136.4
150.0 0 & A -LOAM 149.5 B -SANDY LOAM 148.1 C -SANDY LOAM	TEST PIT 5 GROUND ELEV=150.0 SHGW ELEV=148.0 BOTTOM OF TP=134.5
150.5 A -LOAM 150.16 B -SANDY LOAM 148.6 C -SANDY LOAM	TEST PIT 6 GROUND ELEV=150.5 SHGW ELEV=148.5 BOTTOM OF TP=139.0
146.9 A -LOAM 146.73 B -SANDY LOAM 144.9 C -LOAMY SAND	TEST PIT 7 GROUND ELEV=146.9 SHGW ELEV=144.9 BOTTOM OF TP=132.9
145.9 0 -LOAM 145.73 B -SANDY LOAM 144.06 C -LOAMY SAND	TEST PIT 8 GROUND ELEV=145.9 SHGW ELEV=143.9 BOTTOM OF TP=134.9
146.4 0 -LOAM 146.2 B -SANDY LOAM 144.98 C -LOAMY SAND	TEST PIT 9 GROUND ELEV=146.4 SHGW ELEV=144.4 BOTTOM OF TP=135.4
146.1 A -LOAM 144.26 B -SANDY LOAM 143.51 C -LOAMY SAND	TEST PIT 10 GROUND ELEV=146.1 SHGW ELEV=144.1 BOTTOM OF TP=135.1
145.0 0 & A -LOAM 144.25 C-LOAMY SAND 132.5	TEST PIT 11 GROUND ELEV=145.0 SHGW ELEV=143.0 BOTTOM OF TP=132.5
144.8 0 & A -LOAM 144.3 B -SANDY LOAM 143.13 C -LOAMY SAND	TEST PIT 12 GROUND ELEV=144.8 SHGW ELEV=142.8 BOTTOM OF TP=133.8

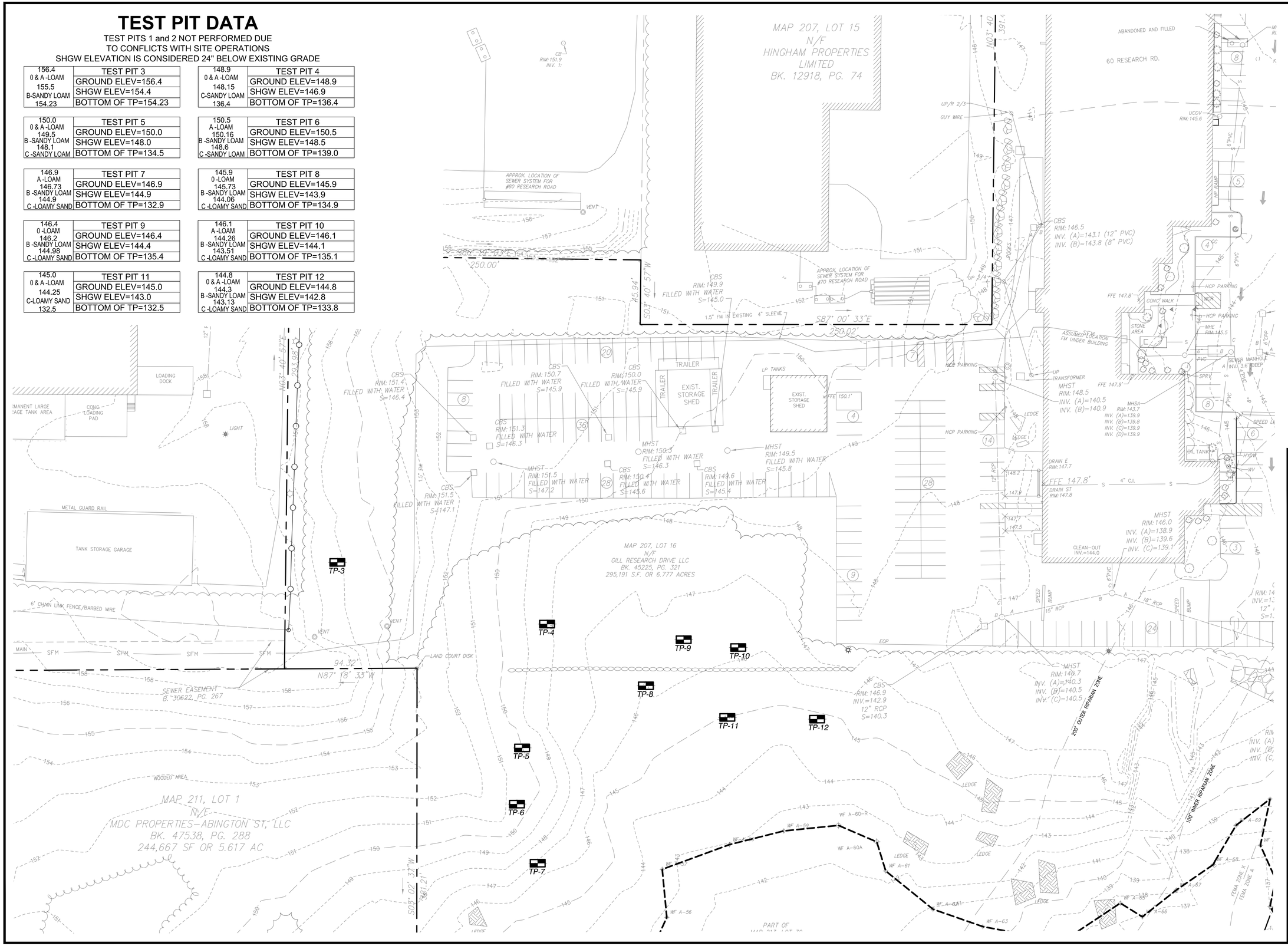

Date	Description	No.
2.23.2021	REVISED PER PEER REVIEW COMMENTS	3
1.29.2021	REVISED PER PEER REVIEW COMMENTS	2
1.04.2021	REVISED PER PEER REVIEW COMMENTS	1

Revisions

2-23-2021

COMMONWEALTH OF MASSACHUSETTS
GABRIEL R. CROCKER
CIVIL
No. 47917
REGISTERED PROFESSIONAL ENGINEER

GABRIEL R. CROCKER
PROFESSIONAL ENGINEER, MA REGISTRATION #47917

Crocker Design Group
2 SHARP STREET, UNIT B
HINGHAM, MA 02043
P: 781-919-0808

Project

WAREHOUSE BUILDING

60 RESEARCH RD AND 73 ABINGTON STREET, HINGHAM, MA

Prepared for

GILL RESEARCH DRIVE LLC.

60 RESEARCH RD , HINGHAM, MA

Drawing Title

TEST PIT PLAN

Project No.	100-102
Date	10.19.2020
Scale	1"=30'
Drawn By	AS
Approved By	GC

Drawing No. **C-7**

C:\CDG\Crocker Design Group, LLC\Gabriel Crocker - Projects\100-102 Hingham - 73 Abington St\dwg\Plot Sheets\Site Plan Application_ 11 TEST PIT PLAN.dwg, 03. LAYOUT PLAN, Feb 23, 2021 21:51

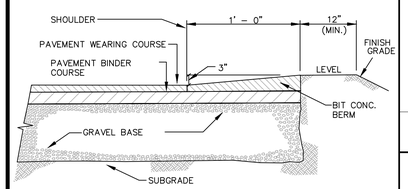

SEE BITUMINOUS PAVEMENT SECTION FOR PAVEMENT AND GRAVEL BASE SECTION REQUIREMENTS

CAPE COD BERM DETAIL

NOT TO SCALE



CONSERVATION SIGN DETAIL

NOT TO SCALE

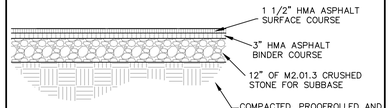

BITUMINOUS PAVEMENT SECTION

NOT TO SCALE

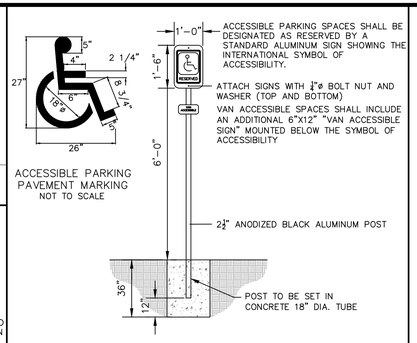

ACCESSIBLE PARKING SIGN

NOT TO SCALE

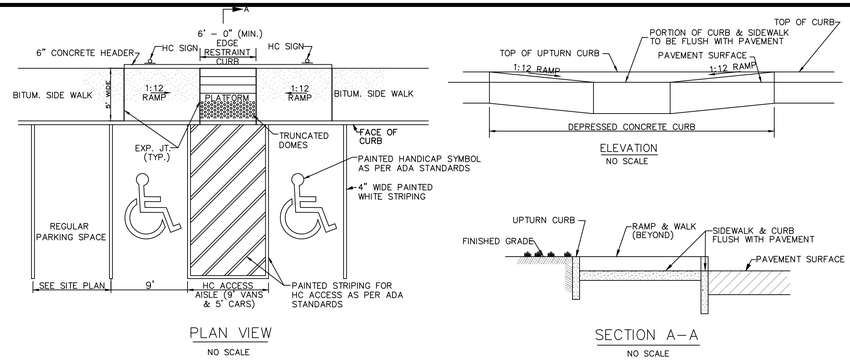

HANDICAP PARKING LOT STRIPING AND HC STALLS

NOT TO SCALE

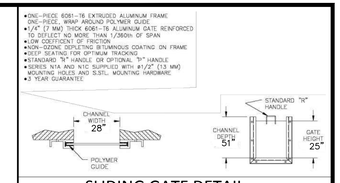

SLIDING GATE DETAIL

NOT TO SCALE

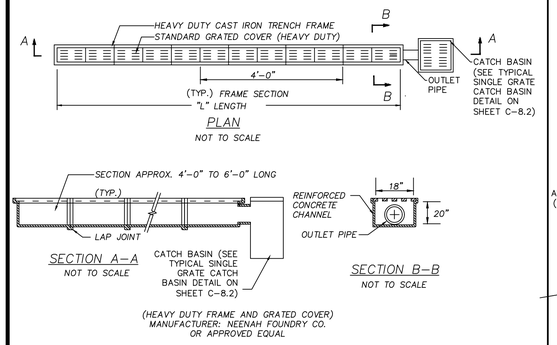

TRENCH DRAIN

NOT TO SCALE

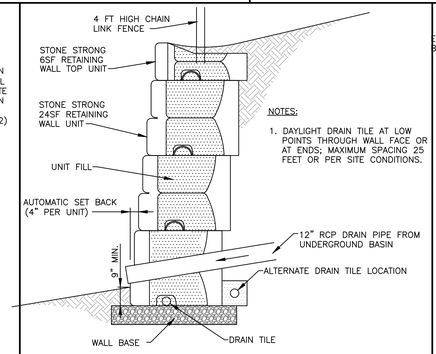

"STONE STRONG" RETAINING WALL CROSS SECTION

NOT TO SCALE

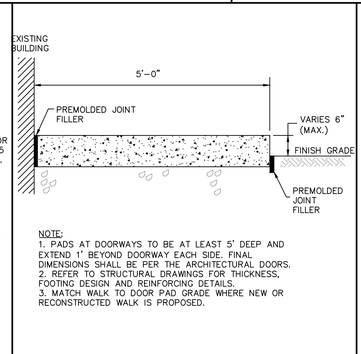

DOOR PAD

NOT TO SCALE

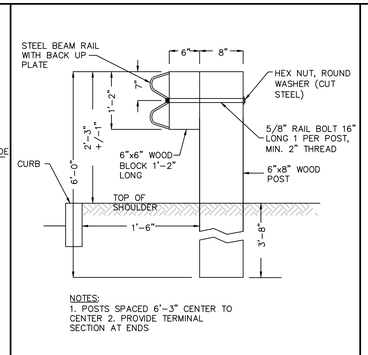

WOOD POST GUARD RAIL

NOT TO SCALE

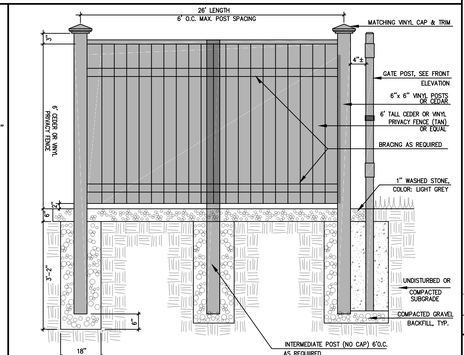

DUMPSTER PAD AND ENCLOSURE

NOT TO SCALE

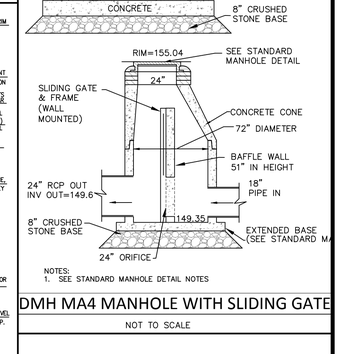

DMH MA4 MANHOLE WITH SLIDING GATE

NOT TO SCALE

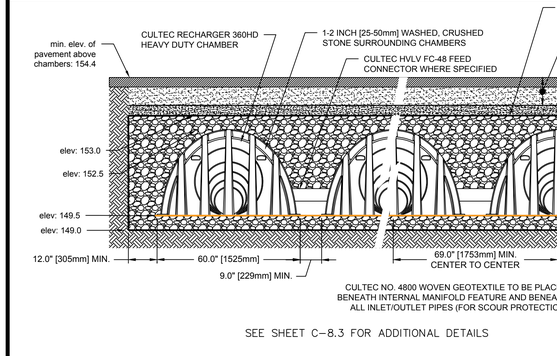

CULTEC R-360HD CAMBER DETAIL FOR UG-2

NOT TO SCALE

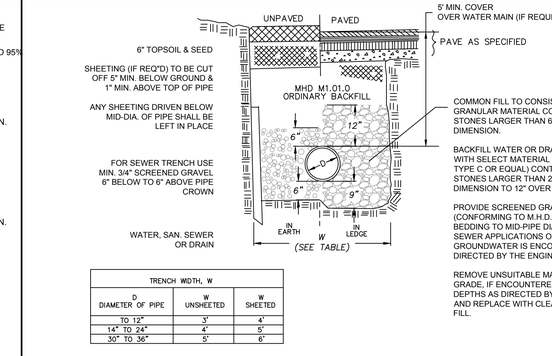

TRENCH WIDTH, W			
D DIAMETER OF PIPE	W UNSHEETED	W SHEETED
TO 12"	3'	4'
14" TO 24"	4'	5'
30" TO 36"	5'	6'

TYPICAL TRENCH SECTION

NOT TO SCALE

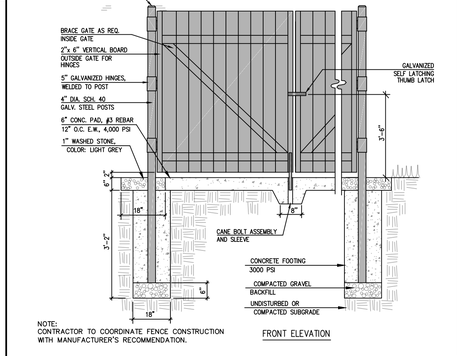

DUMPSTER PAD AND ENCLOSURE

NOT TO SCALE

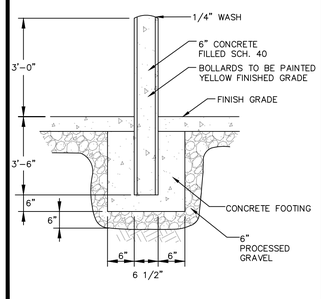

CONCRETE FILLED STEEL BOLLARD

NOT TO SCALE

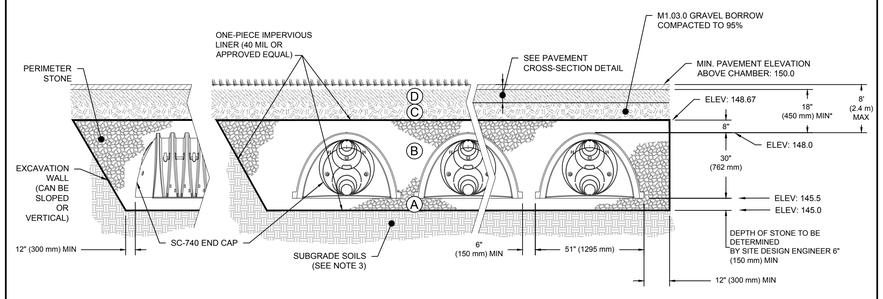

SEE SHEET C–8.3 FOR ADDITIONAL DETAILS

ADS SC-740 CHAMBER DETAIL FOR UG-1

NOT TO SCALE

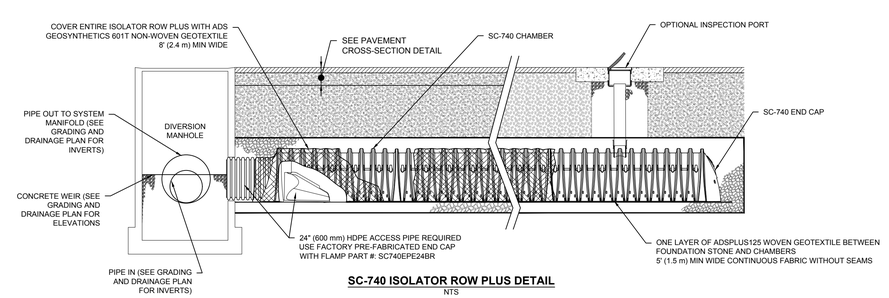

SC-740 ISOLATOR ROW PLUS DETAIL
NTS

ADS SC-740 ISOLATOR PLUS CHAMBER DETAIL FOR UG-1

NOT TO SCALE

Date	Description	No.
2.23.2021	REVISED PER PEER REVIEW COMMENTS	3
1.29.2021	REVISED PER PEER REVIEW COMMENTS	2
1.04.2021	REVISED PER PEER REVIEW COMMENTS	1

Revisions

2-23-2021

COMMONWEALTH OF MASSACHUSETTS — GABRIEL R. CROCKER — CIVIL — No. 47917 — REGISTERED PROFESSIONAL ENGINEER

GABRIEL R. CROCKER
PROFESSIONAL ENGINEER, MA REGISTRATION #47917

Crocker Design Group
2 SHARP STREET, UNIT B
HINGHAM, MA 02043
P: 781–919–0808

Project

WAREHOUSE BUILDING

60 RESEARCH RD AND 73 ABINGTON STREET, HINGHAM, MA

Prepared for

GILL RESEARCH DRIVE LLC.

60 RESEARCH RD , HINGHAM, MA

Drawing Title

DETAIL SHEET

Project No.	100-102
Date	10.19.2020
Scale	AS NOTED
Drawn By	AS
Approved By	GC

Drawing No.

C-8.1

C:\CDG\Crocker Design Group, LLC\Gabriel Crocker – Projects\100-102 Hingham – 75 Abington St\dwg\Plot Sheets\Site Plan Application\ 08. DETAIL SHEET dwg, C-8.1 DETAIL SHEET, X, Feb 23, 2021, 21:51

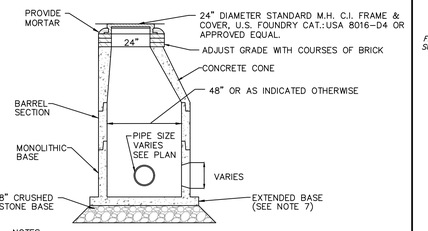

NOTES:
1. MANHOLE DESIGN SHALL CONFORM TO LATEST ASTM C478.
2. REINFORCING STEEL SHALL CONFORM TO LATEST ASTM A 185.
3. CONCRETE COMPRESSIVE STRENGTH – 4,000 PSI @ 28 DAYS.
4. ONE POUR MONOLITHIC BASE.
5. BITUMASTIC BUTYL RUBBER FOR JOINTS SHALL CONFORM TO LATEST ASTM C443 AND FED SS–S–201A SPEC.
6. COVERS TO BE STAMPED "DRAIN"
7. CONTRACTOR TO PROVIDE BUOYANCY CALCULATIONS WITH THE PRECAST STRUCTURE SHOP DRAWING PACKAGE. ASSUME ESTIMATED SEASONAL HIGH GROUNDWATER IS 2 FEET BELOW EXISTING GRADE. USE FACTOR OF SAFETY OF 1.5 APPLIED TO UNIT FORCE.

PRECAST CONCRETE DRAIN MANHOLE

NOT TO SCALE

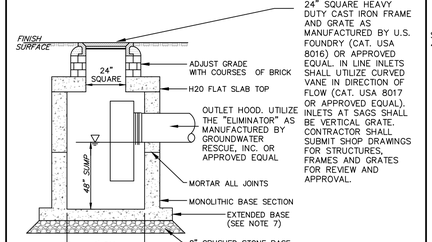

NOTES:
1. STRUCTURE DESIGN TO LATEST ASTM C478.
2. REINFORCING STEEL CONFORMS TO LATEST ASTM A 185.
3. CONCRETE COMPRESSIVE STRENGTH – 4,000 PSI @ 28 DAYS.
4. LAT SLAB TOP AASHTO H–20
5. ONE POUR MONOLITHIC BASE.
6. UTILIZE CURVED VANE GRATES WHERE CATCH BASIN IS ON AN INLINE SLOPE CONDITION.
7. CONTRACTOR TO PROVIDE BUOYANCY CALCULATIONS WITH THE PRECAST STRUCTURE SHOP DRAWING PACKAGE. ASSUME ESTIMATED SEASONAL HIGH GROUNDWATER IS 2 FEET BELOW EXISTING GRADE. USE FACTOR OF SAFETY OF 1.5 APPLIED TO UNIT FORCE.

SINGLE GRATE CATCH BASIN

NOT TO SCALE

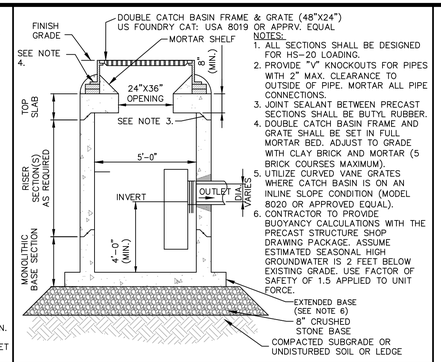

NOTES:
1. ALL SECTIONS SHALL BE DESIGNED FOR HS–20 LOADING.
2. PROVIDE "V" KNOCKOUTS FOR PIPES WITH 2" MAX. CLEARANCE TO OUTSIDE OF PIPE. MORTAR ALL PIPE CONNECTIONS.
3. JOINT SEALANT BETWEEN PRECAST SECTIONS SHALL BE BUTYL RUBBER.
4. DOUBLE CATCH BASIN FRAME AND GRATE SHALL BE SET IN FULL MORTAR BED. ADJUST TO GRADE WITH CLAY BRICK AND MORTAR (5 BRICK COURSES MAXIMUM).
5. UTILIZE CURVED VANE GRATES WHERE CATCH BASIN IS ON AN INLINE SLOPE CONDITION (MODEL 8020 OR APPROVED EQUAL).
6. CONTRACTOR TO PROVIDE BUOYANCY CALCULATIONS WITH THE PRECAST STRUCTURE SHOP DRAWING PACKAGE. ASSUME ESTIMATED SEASONAL HIGH GROUNDWATER IS 2 FEET BELOW EXISTING GRADE. USE FACTOR OF SAFETY OF 1.5 APPLIED TO UNIT FORCE.

DOUBLE GRATE CATCH BASIN

NOT TO SCALE

DIAMETER	WEIGHT	A	B	C	L	W
12"	340	4"	1'– 10"	2'– 0"	3'– 10"	2'– 0"
18"	670	9"	2'– 1"	2'– 1"	4'– 2"	3'– 0"
21"	1300	9 1/2"	3'– 6"	2'– 6"	6'– 0"	4'– 0"
24"	1300	9 1/2"	3'– 6"	2'– 6"	6'– 0"	4'– 0"
30"	1850	1'– 0"	4'– 5"	1'– 8"	6'– 1"	5'– 0"
36"	3500	1'– 3"	5'– 2"	2'– 11"	8'– 1"	6'– 0"
42"	4930	1'– 9"	5'– 3"	2'– 11"	8'– 2"	6'– 6"
48"	6700	2'– 0"	6'– 0"	2'– 2"	8'– 2"	7'– 0"
54"	7150	2'– 3"	5'– 6"	2'– 9"	8'– 3"	6'– 10"

NOTES:
1. CLASS AND TYPE OF CONCRETE SHALL BE AS SPECIFIED FOR REINFORCED CONCRETE PIPE.
2. STRUCTURAL DESIGN OF END SECTION SHALL CONFORM TO THAT OF STANDARD REINFORCED CONCRETE CULVERT PIPE.
3. LENGTH OF PIPE SHOWN ON THE PLANS DOES NOT INCLUDE CONNECTOR SECTION (LENGTH C).
4. SECURITY BARS REQUIRED FOR ALL DISCHARGE PIPES 18" IN DIAM. OR GREATER.

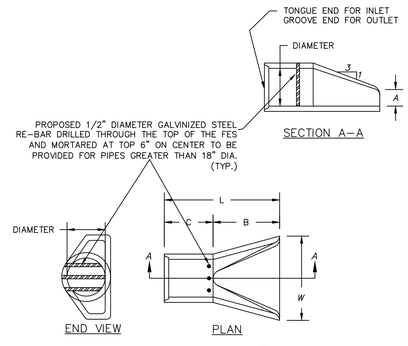

CONCRETE FLARED END SECTION WITH SECURITY BARS

NOT TO SCALE

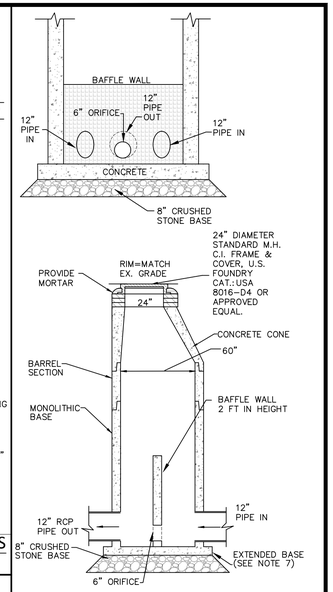

NOTES:
1. MANHOLE DESIGN SHALL CONFORM TO LATEST ASTM C478.
2. REINFORCING STEEL SHALL CONFORM TO LATEST ASTM A 185.
3. CONCRETE COMPRESSIVE STRENGTH – 4,000 PSI @ 28 DAYS.
4. ONE POUR MONOLITHIC BASE.
5. BITUMASTIC BUTYL RUBBER FOR JOINTS SHALL CONFORM TO LATEST ASTM C443 AND FED SS–S–201A SPEC.
6. COVERS TO BE STAMPED "DRAIN"
7. CONTRACTOR TO PROVIDE BUOYANCY CALCULATIONS WITH THE PRECAST STRUCTURE SHOP DRAWING PACKAGE. ASSUME ESTIMATED SEASONAL HIGH GROUNDWATER IS 2 FEET BELOW EXISTING GRADE. USE FACTOR OF SAFETY OF 1.5 APPLIED TO UNIT FORCE.

OCS-3 OUTLET CONTROL STRUCTURE

NOT TO SCALE

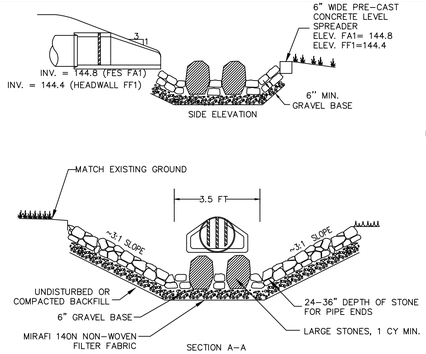

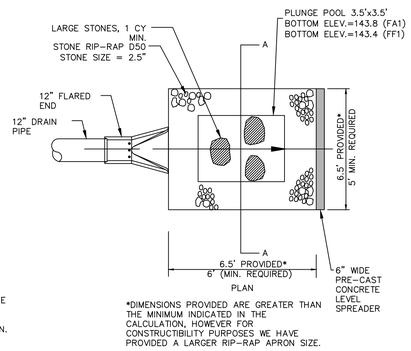

*DIMENSIONS PROVIDED ARE GREATER THAN THE MINIMUM INDICATED IN THE CALCULATION, HOWEVER FOR CONSTRUCTIBILITY PURPOSES WE HAVE PROVIDED A LARGER RIP–RAP APRON SIZE.

LEVEL SPREADER/PLUNGE POOL/ENERGY DISSIPATER

NOT TO SCALE

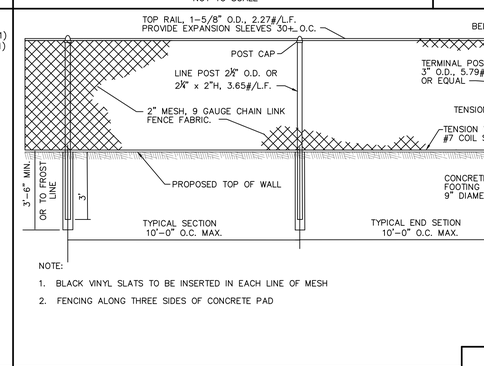

NOTE:
1. BLACK VINYL SLATS TO BE INSERTED IN EACH LINE OF MESH
2. FENCING ALONG THREE SIDES OF CONCRETE PAD

ELEVATION OF TYPICAL CHAIN LINK FENCE

NOT TO SCALE

NOTES:
1. MANHOLE DESIGN SHALL CONFORM TO LATEST ASTM C478.
2. REINFORCING STEEL SHALL CONFORM TO LATEST ASTM A 185.
3. CONCRETE COMPRESSIVE STRENGTH – 4,000 PSI @ 28 DAYS.
4. ONE POUR MONOLITHIC BASE.
5. BITUMASTIC BUTYL RUBBER FOR JOINTS SHALL CONFORM TO LATEST ASTM C443 AND FED SS–S–201A SPEC.
6. COVERS TO BE STAMPED "DRAIN"
7. CONTRACTOR TO PROVIDE BUOYANCY CALCULATIONS WITH THE PRECAST STRUCTURE SHOP DRAWING PACKAGE. ASSUME ESTIMATED SEASONAL HIGH GROUNDWATER IS 2 FEET BELOW EXISTING GRADE. USE FACTOR OF SAFETY OF 1.5 APPLIED TO UNIT FORCE.

UNDERGROUND BASIN (UG-1) OUTLET CONTROL STRUCTURE (OCS-1)

NOT TO SCALE

2.23.2021	REVISED PER PEER REVIEW COMMENTS	3
1.29.2021	REVISED PER PEER REVIEW COMMENTS	2
1.04.2021	REVISED PER PEER REVIEW COMMENTS	1
Date	Description	No.

Revisions

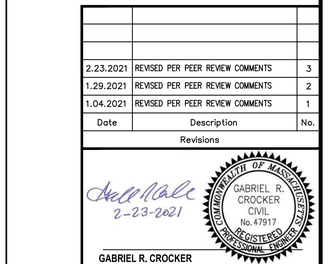

NOTES:
1. MANHOLE DESIGN SHALL CONFORM TO LATEST ASTM C478.
2. REINFORCING STEEL SHALL CONFORM TO LATEST ASTM A 185.
3. CONCRETE COMPRESSIVE STRENGTH – 4,000 PSI @ 28 DAYS.
4. ONE POUR MONOLITHIC BASE.
5. BITUMASTIC BUTYL RUBBER FOR JOINTS SHALL CONFORM TO LATEST ASTM C443 AND FED SS–S–201A SPEC.
6. COVERS TO BE STAMPED "DRAIN"
7. CONTRACTOR TO PROVIDE BUOYANCY CALCULATIONS WITH THE PRECAST STRUCTURE SHOP DRAWING PACKAGE. ASSUME ESTIMATED SEASONAL HIGH GROUNDWATER IS 2 FEET BELOW EXISTING GRADE. USE FACTOR OF SAFETY OF 1.5 APPLIED TO UNIT FORCE.

UNDERGROUND BASIN (UG-2) OUTLET CONTROL STRUCTURE (OCS-2)

NOT TO SCALE

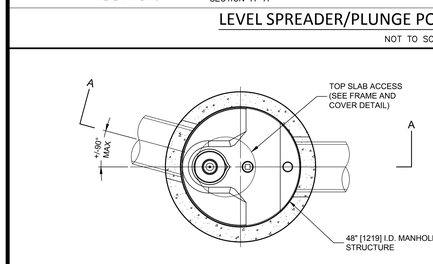

FRAME AND COVER

(MAY VARY)

NOT TO SCALE

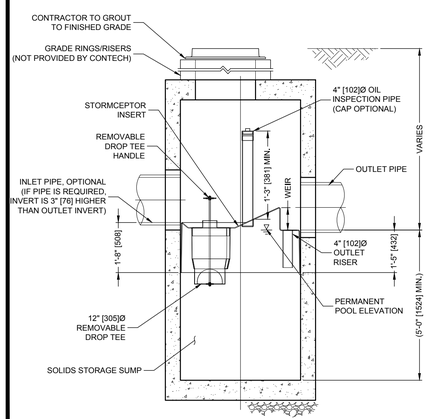

SECTION A-A

GENERAL NOTES
1. CONTECH TO PROVIDE ALL MATERIALS UNLESS NOTED OTHERWISE.
2. FOR SITE SPECIFIC DRAWINGS WITH DETAILED STRUCTURE DIMENSIONS AND WEIGHT, PLEASE CONTACT YOUR CONTECH ENGINEERED SOLUTIONS LLC REPRESENTATIVE. www.ContechES.com
3. STORMCEPTOR WATER QUALITY STRUCTURE SHALL BE IN ACCORDANCE WITH ALL DESIGN DATA AND INFORMATION CONTAINED IN THIS DRAWING. CONTRACTOR TO CONFIRM STRUCTURE MEETS REQUIREMENTS OF PROJECT.
4. STORMCEPTOR STRUCTURE SHALL MEET AASHTO HS20 LOAD RATING, ASSUMING EARTH COVER OF 0' - 2' [610], AND GROUNDWATER ELEVATION AT, OR BELOW, THE OUTLET PIPE INVERT ELEVATION. ENGINEER OF RECORD TO CONFIRM ACTUAL GROUNDWATER ELEVATION. CASTINGS SHALL MEET AASHTO M306 AND BE CAST WITH THE CONTECH LOGO.
5. STORMCEPTOR STRUCTURE SHALL BE PRECAST CONCRETE CONFORMING TO ASTM C478 AND AASHTO LOAD FACTOR DESIGN METHOD.
6. ALTERNATE UNITS ARE SHOWN IN MILLIMETERS [mm].

INSTALLATION NOTES
A. ANY SUB-BASE, BACKFILL DEPTH, AND/OR ANTI-FLOTATION PROVISIONS ARE SITE-SPECIFIC DESIGN CONSIDERATIONS AND SHALL BE SPECIFIED BY ENGINEER OF RECORD.
B. CONTRACTOR TO PROVIDE EQUIPMENT WITH SUFFICIENT LIFTING AND REACH CAPACITY TO LIFT AND SET THE STORMCEPTOR MANHOLE STRUCTURE.
C. CONTRACTOR TO INSTALL JOINT SEALANT BETWEEN ALL STRUCTURE SECTIONS AND ASSEMBLE STRUCTURE.
D. CONTRACTOR TO PROVIDE, INSTALL, AND GROUT INLET AND OUTLET PIPE(S). MATCH PIPE INVERTS WITH ELEVATIONS SHOWN. ALL PIPE CENTERLINES TO MATCH PIPE OPENING CENTERLINES.
E. CONTRACTOR TO TAKE APPROPRIATE MEASURES TO ASSURE UNIT IS WATER TIGHT, HOLDING WATER TO FLOWLINE INVERT MINIMUM. IT IS SUGGESTED THAT ALL JOINTS BELOW PIPE INVERTS ARE GROUTED.

STC450i GRATED INLET AND IN-LINE STORWATER QUALITY STRUCTURE DETAIL

NOT TO SCALE

NOTES:
1. MANHOLE DESIGN SHALL CONFORM TO LATEST ASTM C478.
2. REINFORCING STEEL SHALL CONFORM TO LATEST ASTM A 185.
3. CONCRETE COMPRESSIVE STRENGTH – 4,000 PSI @ 28 DAYS.
4. ONE POUR MONOLITHIC BASE.
5. BITUMASTIC BUTYL RUBBER FOR JOINTS SHALL CONFORM TO LATEST ASTM C443 AND FED SS–S–201A SPEC.
6. COVERS TO BE STAMPED "DRAIN"
7. CONTRACTOR TO PROVIDE BUOYANCY CALCULATIONS WITH THE PRECAST STRUCTURE SHOP DRAWING PACKAGE. ASSUME ESTIMATED SEASONAL HIGH GROUNDWATER IS 2 FEET BELOW EXISTING GRADE. USE FACTOR OF SAFETY OF 1.5 APPLIED TO UNIT FORCE.

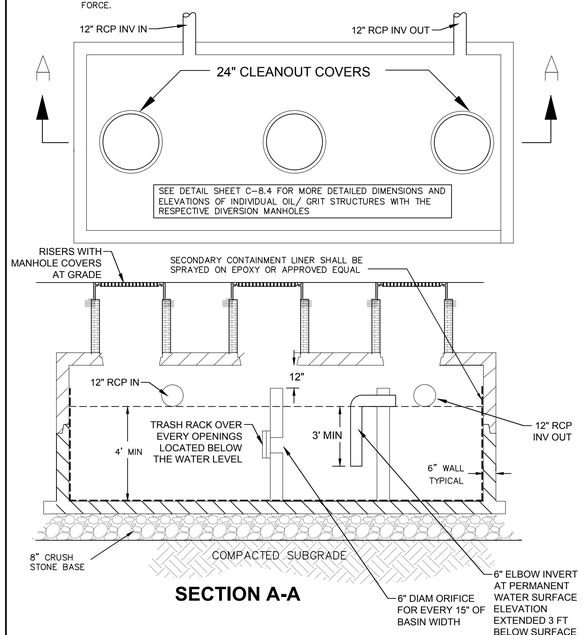

SECTION A-A

TYPICAL OIL/GRIT SEPARATOR (SEE SHEET 8.5 FOR INDIVIDUAL DETAILS)

NOT TO SCALE

GABRIEL R. CROCKER
CIVIL
No. 47917
REGISTERED PROFESSIONAL ENGINEER
COMMONWEALTH OF MASSACHUSETTS

2-23-2021

GABRIEL R. CROCKER
PROFESSIONAL ENGINEER, MA REGISTRATION #47917

Crocker Design Group
2 SHARP STREET, UNIT B
HINGHAM, MA 02043
P: 781–919–0808

Project

WAREHOUSE BUILDING

60 RESEARCH RD AND 73 ABINGTON STREET, HINGHAM, MA

Prepared for

GILL RESEARCH DRIVE LLC.

60 RESEARCH RD , HINGHAM, MA

Drawing Title

DETAIL SHEET

Project No.	100-102
Date	10.19.2020
Scale	AS NOTED
Drawn By	AS
Approved By	GC

Drawing No.

C-8.2

C:\2020\Crocker Design Group, LLC\Gabriel Crocker – Projects\100–102 Hingham – 75 Abington St\dwg\Plot Sheets\Site Plan Application_08 DETAIL SHEET.dwg, C-8.2 DETAIL SHEET Y, Feb 23, 2021 - 21:51

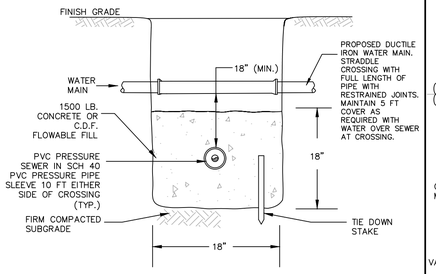

NOTE:
1. CONTRACTOR TO PROVIDE SCH40 PRESSURE PIPE SLEEVE FOR PRESSURE EFFLUENT SEWER WHEN 10 FT HORIZONTAL SEPARATION CANNOT BE MAINTAINED OR AT UTILITY CROSSING.

WATER MAIN/PRESSURE SEWER CROSSING SLEEVE

NOT TO SCALE

NOTE:
THIS MECHANICAL JOINT OFFSET SHALL BE USED WHERE THE WATER MAIN MIST DROP BELOW ANY STORM SEWER CULVERT CROSSING AND ANY OTHER GRAVITY FLOW CONTROLLED UTILITY

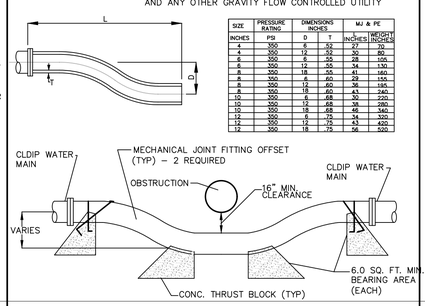

SIZE	PRESSURE RATING	DIMENSIONS INCHES		MJ & PE	
INCHES	PSI	D	T	INCHES	WEIGHT POUNDS
4	350	6	.52	27	70
6	350	12	.52	30	80
6	350	6	.55	28	105
8	350	12	.55	34	130
8	350	18	.55	41	160
8	350	6	.60	29	155
8	350	12	.60	36	185
8	350	18	.60	43	240
10	350	6	.68	30	220
10	350	12	.68	38	280
10	350	18	.68	46	340
12	350	6	.75	34	320
12	350	12	.75	43	400
12	350	18	.75	56	500

WATER MAIN LOWERING METHOD DETAIL

NOT TO SCALE

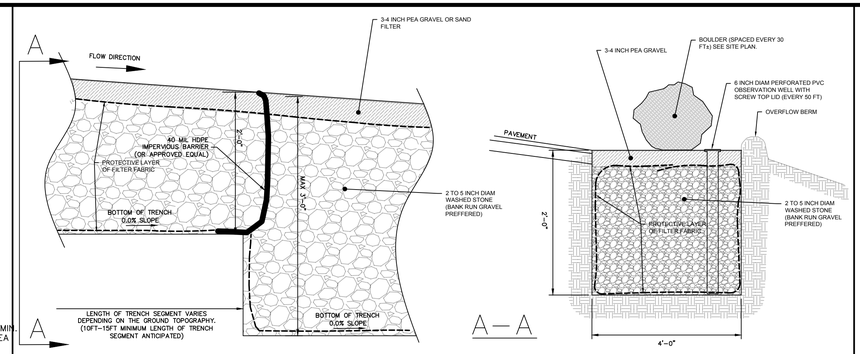

STONE TRENCH WITH STEPPED BOTTOM DETAIL

NOT TO SCALE

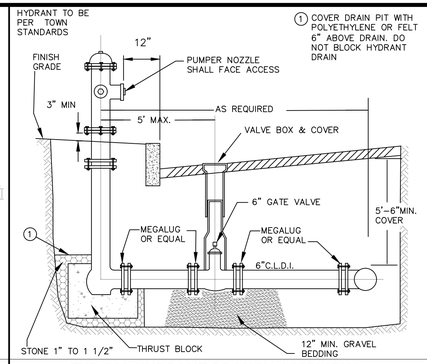

TYPICAL HYDRANT BRANCH ASSEMBLY

NOT TO SCALE

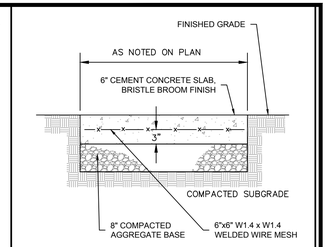

NOTES:
COORDINATE ALL PAD OPENINGS WITH EQUIPMENT MANUFACTURER END MESH 3" FROM WALKWAY EDGE

COORDINATE ALL PAD DIMENSIONS, THICKNESS, REINFORCING REQUIREMENTS WITH EQUIPMENT MANUFACTURER AND THE ASSOCIATED ENGINEER FOR THAT TRADE PRIOR TO CONSTRUCTION.

CONCRETE TRANSFORMER/ MECHANICAL PAD

NOT TO SCALE

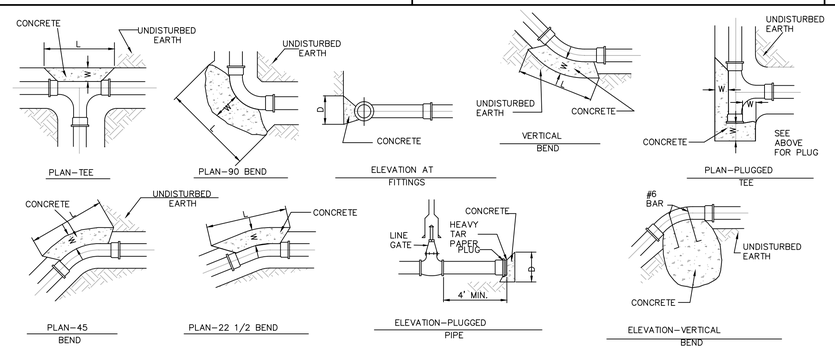

PIPE SIZE	TEE L	TEE D	22 1/2 L	22 1/2 D	45 L	45 D	90 L	90 D	W
6"	18"	15"	15"	12"	15"	12"	15"	15"	21"
8"	2'	18"	18"	12"	18"	12"	2'	18"	2'
12"	3'	2'	2'	12"	2'	12"	3'	2'	28"
16"	4'	2.5'	2'	12"	2.33'	15"	4'	2.5'	31"
20"	5.25'	3'	2'	18"	3'	2'	5.25'	3'	33"
24"	7.5'	3'	3'	18"	4'	2.5'	7.5'	3'	3'

THRUST BLOCK SCHEDULE

BASIS:
2,000 LB/SQ.FT. SOIL RESISTANCE 250 PSI WATER PRESSURE CORRECTION FACTORS FOR OTHER SOILS:

SOFT CLAY	4
SAND	2
SAND & GRAVEL	1.33
SHALE	0.4

NOTE:
1. IF SOFT MATERIALS ARE ENCOUNTERED, THE THRUST BLOCKS SIZES SHALL BE ADJUSTED ACCORDINGLY.
2. CONCRETE TO BE 3000 PSI.

CONCRETE TRUST BLOCK

NOT TO SCALE

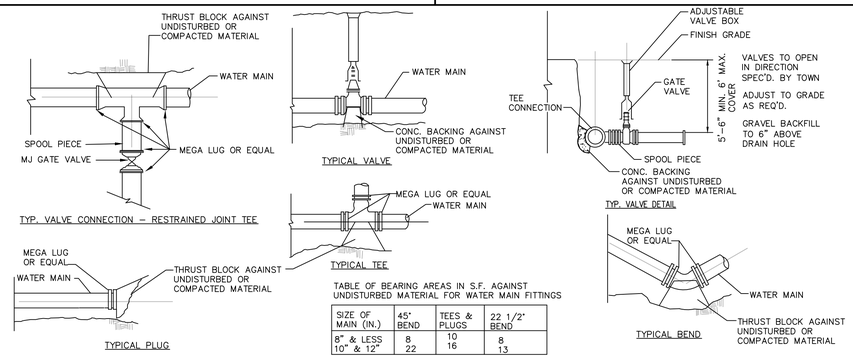

TABLE OF BEARING AREAS IN S.F. AGAINST UNDISTURBED MATERIAL FOR WATER MAIN FITTINGS

SIZE OF MAIN (IN.)	45° BEND	TEES & PLUGS	22 1/2° BEND
8" & LESS	8	10	8
10" & 12"	22	16	13

TYPICAL WATER MAIN SUPPLY CONNECTIONS

NOT TO SCALE

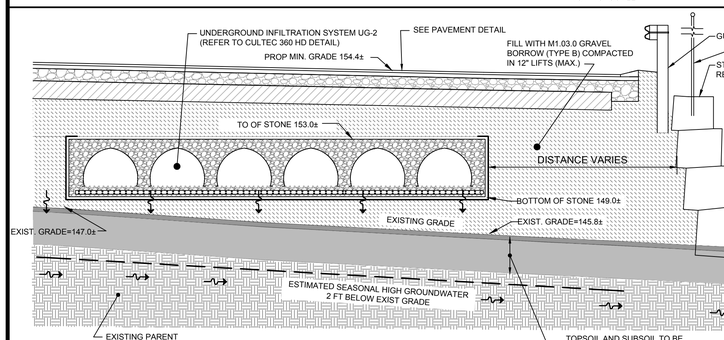

SECTION UG-2 UNDERGROUND INFILTRATION SYSTEM

NOT TO SCALE

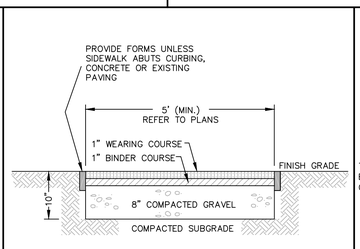

NOTE:
PITCH WALK TO DOWN GRADE SIDE AT 3/16" PER ONE FOOT (MAX.)

BITUMINOUS CONCRETE WALK

NOT TO SCALE

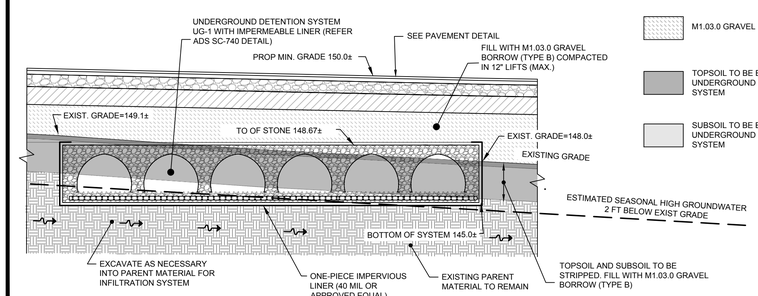

SECTION UG-1 UNDERGROUND DETENTION SYSTEM

NOT TO SCALE

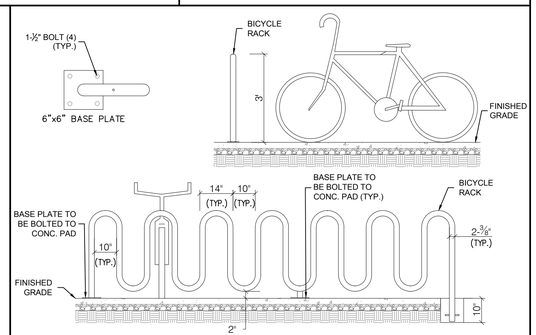

NOTE:
SEE CONCRETE CROSS SECTION DETAIL FOR MORE INFORMATION AND ACTUAL DIMENSIONS OF CONCRETE PAD FOR BIKE RACK CONSTRUCTION.

BICYCLE RACK DETAIL

NOT TO SCALE

OPTIONS : ☒ DH502–104 (HARD WIRED LEVEL CONTROLS)
☐ DR502–104 (WIRELESS LEVEL CONTROLS)

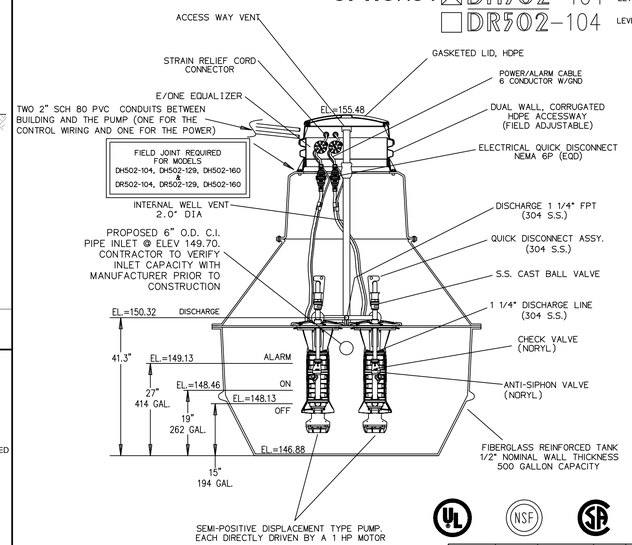

CONCRETE BALLAST MAY BE REQUIRED SEE INSTALLATION INSTRUCTIONS FOR DETAILS

NOTE: DIMENSIONS ARE FOR REF ONLY

AD	CH	10/20/10	D	
DR BY	CHK'D	DATE	ISSUE	SCALE

e/one SEWER SYSTEMS

MODEL DH502 / DR502 DETAIL SHEET

NA0054P02

E-ONE SEWER PUMP

NOT TO SCALE

No.	Description	Date
	Revisions	
3	REVISED PER PEER REVIEW COMMENTS	2.23.2021
2	REVISED PER PEER REVIEW COMMENTS	1.29.2021
1	REVISED PER PEER REVIEW COMMENTS	1.04.2021

COMMONWEALTH OF MASSACHUSETTS GABRIEL R. CROCKER CIVIL No. 47917 REGISTERED PROFESSIONAL ENGINEER

2-23-2021

GABRIEL R. CROCKER
PROFESSIONAL ENGINEER, MA REGISTRATION #47917

Crocker Design Group
2 SHARP STREET, UNIT B
HINGHAM, MA 02043
P: 781–919–0808

Project
WAREHOUSE BUILDING
60 RESEARCH RD AND 73 ABINGTON STREET, HINGHAM, MA

Prepared for
GILL RESEARCH DRIVE LLC.
60 RESEARCH RD , HINGHAM, MA

Drawing Title
DETAIL SHEET

Project No.	100-102
Date	10.19.2020
Scale	AS NOTED
Drawn By	AS
Approved By	GC

Drawing No.
C-8.3

C:\QDG\Crocker Design Group, LLC\Gabriel Crocker – Projects\100-102 Hingham – 75 Abington St\dwg\Plot Sheets\Site Plan Application_ 08 DETAIL SHEET 2.dwg, C-8.3 DETAIL SHEET 2, Feb 23, 2021 21:51

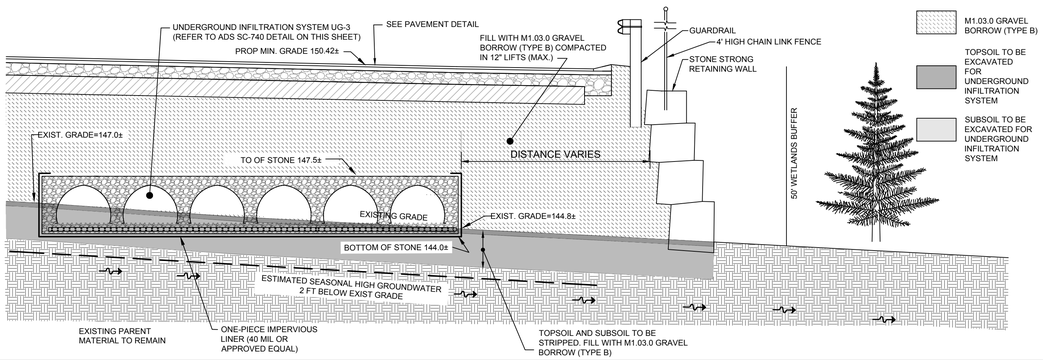

SECTION UG-3 UNDERGROUND DETENTION SYSTEM

NOT TO SCALE

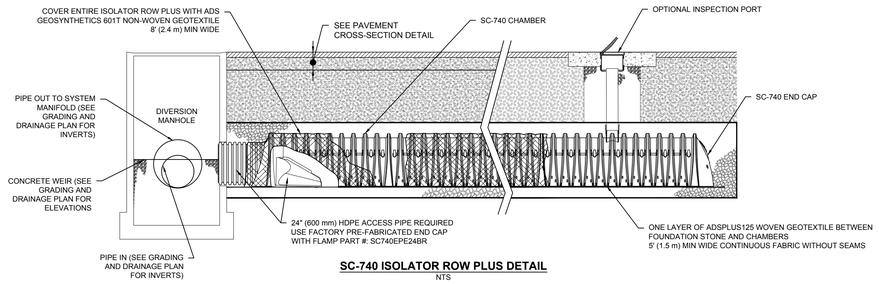

SC-740 ISOLATOR ROW PLUS DETAIL

NTS

ADS SC-740 ISOLATOR PLUS CHAMBER DETAIL FOR UG-3

NOT TO SCALE

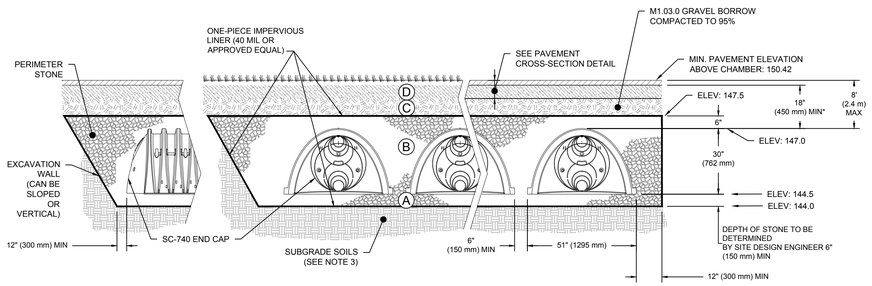

ADS SC-740 CHAMBER DETAIL FOR UG-3

NOT TO SCALE

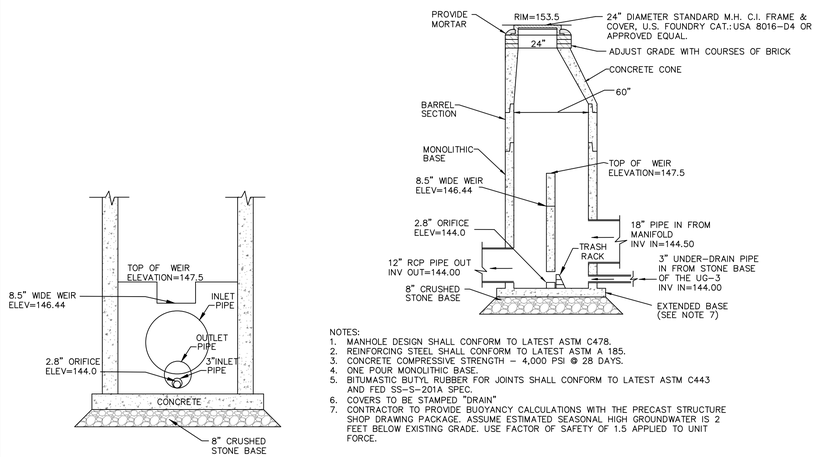

NOTES:
1. MANHOLE DESIGN SHALL CONFORM TO LATEST ASTM C478.
2. REINFORCING STEEL SHALL CONFORM TO LATEST ASTM A 185.
3. CONCRETE COMPRESSIVE STRENGTH – 4,000 PSI @ 28 DAYS.
4. ONE POUR MONOLITHIC BASE.
5. BITUMASTIC BUTYL RUBBER FOR JOINTS SHALL CONFORM TO LATEST ASTM C443 AND FED SS-S-201A SPEC.
6. COVERS TO BE STAMPED "DRAIN"
7. CONTRACTOR TO PROVIDE BUOYANCY CALCULATIONS WITH THE PRECAST STRUCTURE SHOP DRAWING PACKAGE. ASSUME ESTIMATED SEASONAL HIGH GROUNDWATER IS 2 FEET BELOW EXISTING GRADE. USE FACTOR OF SAFETY OF 1.5 APPLIED TO UNIT FORCE.

UNDERGROUND BASIN (UG-3) OUTLET CONTROL STRUCTURE (OCS-3)

NOT TO SCALE

Date	Description	No.
2.23.2021	REVISED PER PEER REVIEW COMMENTS	3
1.29.2021	REVISED PER PEER REVIEW COMMENTS	2
1.04.2021	REVISED PER PEER REVIEW COMMENTS	1

Revisions

2-23-2021

COMMONWEALTH OF MASSACHUSETTS
GABRIEL R. CROCKER
CIVIL
No. 47917
REGISTERED PROFESSIONAL ENGINEER

GABRIEL R. CROCKER
PROFESSIONAL ENGINEER, MA REGISTRATION #47917

Crocker Design Group
2 SHARP STREET, UNIT B
HINGHAM, MA 02043
P: 781-919-0808

Project

WAREHOUSE BUILDING

60 RESEARCH RD AND 73 ABINGTON STREET, HINGHAM, MA

Prepared for

GILL RESEARCH DRIVE LLC.

60 RESEARCH RD , HINGHAM, MA

Drawing Title

DETAIL SHEET

Project No.	100-102
Date	10.19.2020
Scale	AS NOTED
Drawn By	AS
Approved By	GC

Drawing No.

C-8.4

SHEET Z, Feb 23, 2021 21:51
C:\QUO\Crocker Design Group, LLC\Gabriel Crocker - Projects\100-102 Hingham - 75 Abington St\dwg\Plot Sheets\Site Plan Application_ 08 DETAIL SHEET dwg, C-8.4 DETAIL SHEET Z, Feb

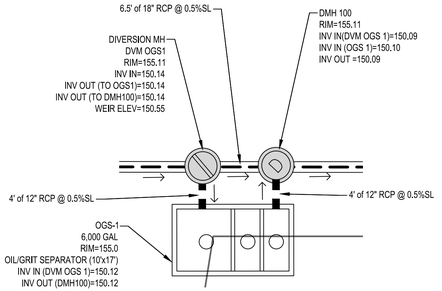

PLAN VIEW OGS-1

NOT TO SCALE

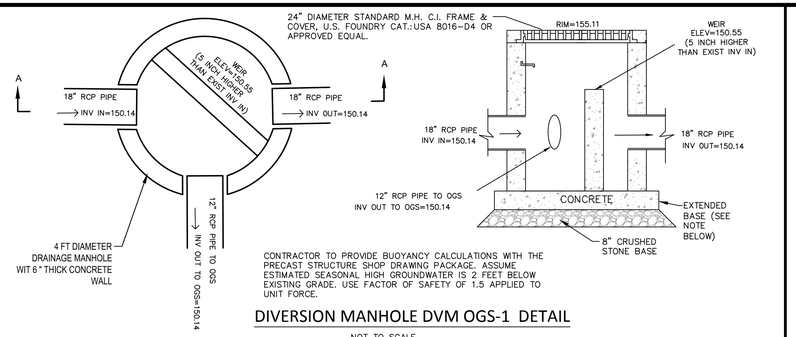

DIVERSION MANHOLE DVM OGS-1 DETAIL

NOT TO SCALE

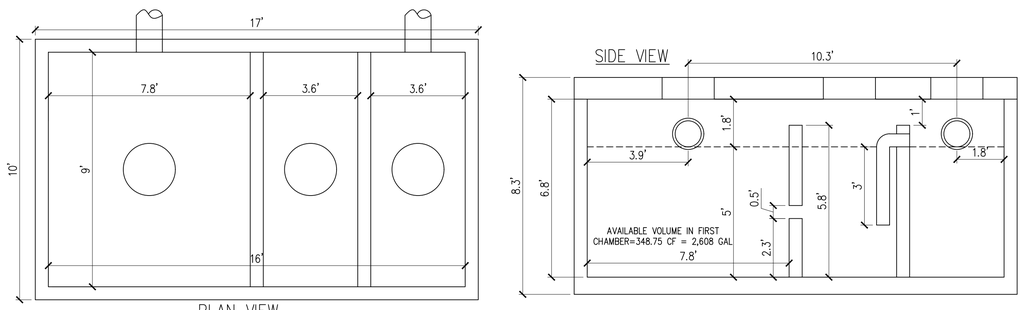

OGS-1 6,000 GAL OIL/GRIT SEPARATOR DETAIL

NOT TO SCALE

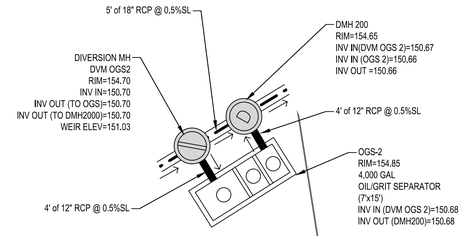

PLAN VIEW OGS-2

NOT TO SCALE

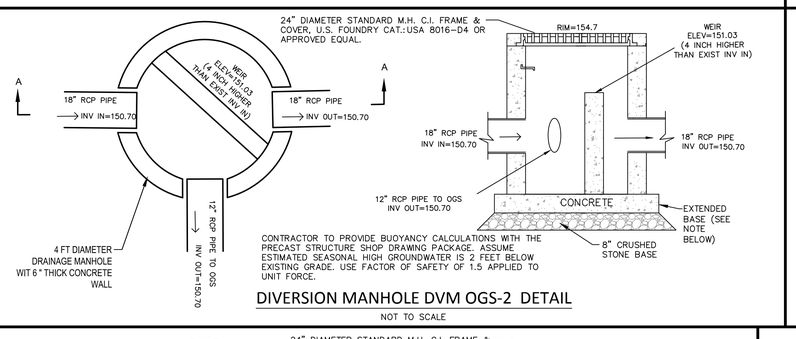

DIVERSION MANHOLE DVM OGS-2 DETAIL

NOT TO SCALE

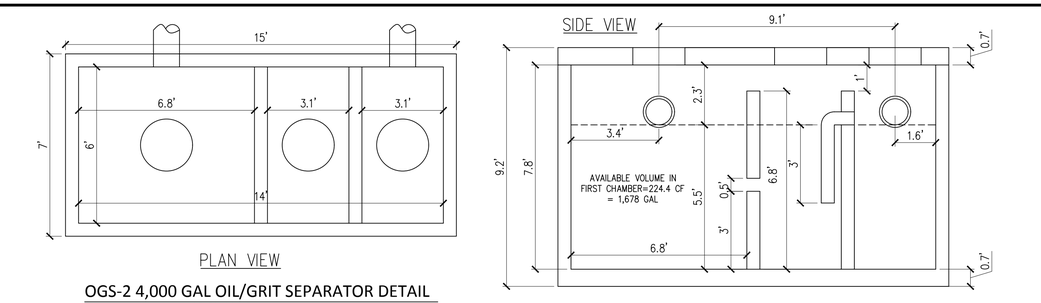

OGS-2 4,000 GAL OIL/GRIT SEPARATOR DETAIL

NOT TO SCALE

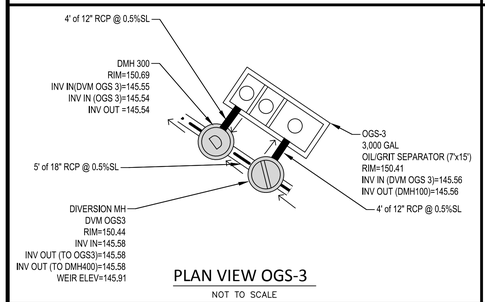

PLAN VIEW OGS-3

NOT TO SCALE

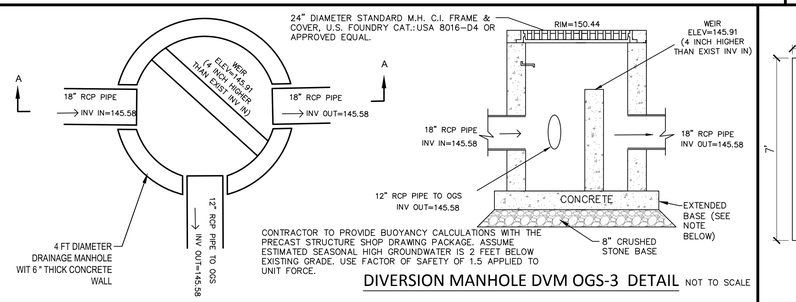

DIVERSION MANHOLE DVM OGS-3 DETAIL

NOT TO SCALE

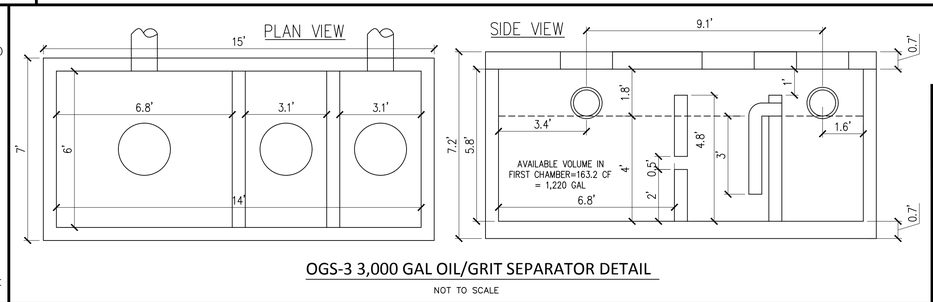

OGS-3 3,000 GAL OIL/GRIT SEPARATOR DETAIL

NOT TO SCALE

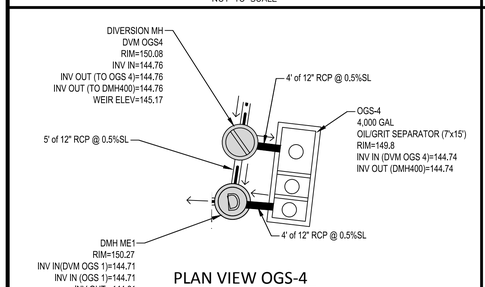

PLAN VIEW OGS-4

NOT TO SCALE

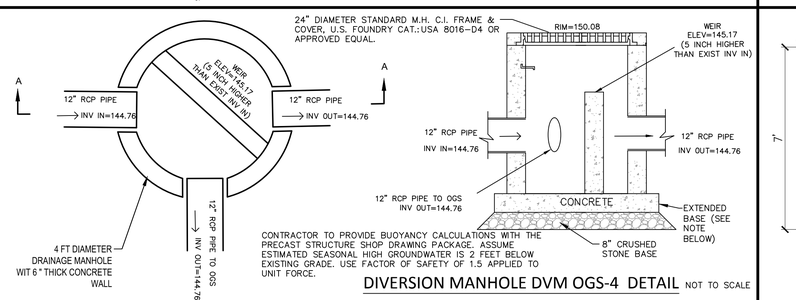

DIVERSION MANHOLE DVM OGS-4 DETAIL

NOT TO SCALE

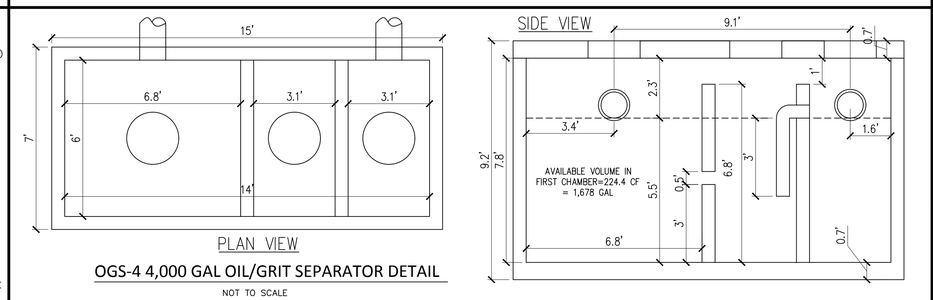

OGS-4 4,000 GAL OIL/GRIT SEPARATOR DETAIL

NOT TO SCALE

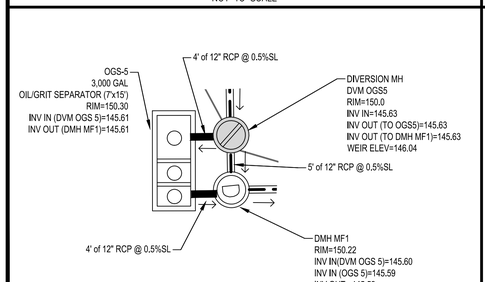

PLAN VIEW OGS-5

NOT TO SCALE

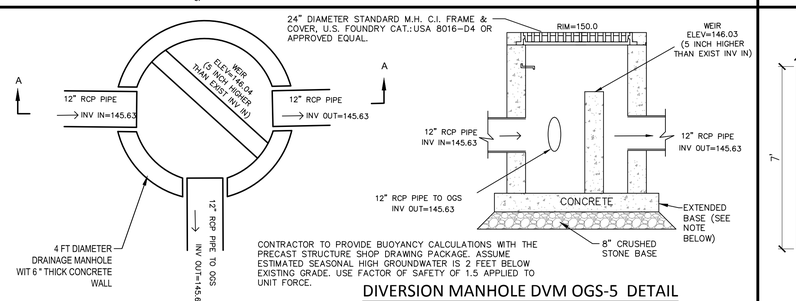

DIVERSION MANHOLE DVM OGS-5 DETAIL

NOT TO SCALE

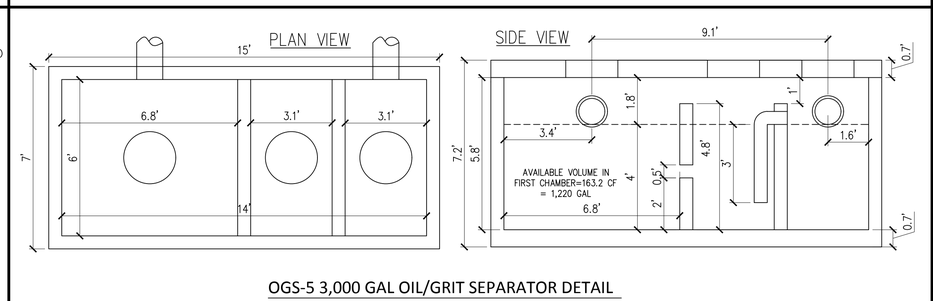

OGS-5 3,000 GAL OIL/GRIT SEPARATOR DETAIL

NOT TO SCALE

Date	Description	No.
2.23.2021	REVISED PER PEER REVIEW COMMENTS	3
1.29.2021	REVISED PER PEER REVIEW COMMENTS	2
1.04.2021	REVISED PER PEER REVIEW COMMENTS	1

Revisions

2-23-2021

COMMONWEALTH OF MASSACHUSETTS
GABRIEL R. CROCKER
CIVIL
No. 47917
REGISTERED PROFESSIONAL ENGINEER

GABRIEL R. CROCKER
PROFESSIONAL ENGINEER, MA REGISTRATION #47917

Crocker Design Group
2 SHARP STREET, UNIT B
HINGHAM, MA 02043
P: 781-919-0808

Project

WAREHOUSE BUILDING

60 RESEARCH RD AND 73 ABINGTON STREET, HINGHAM, MA

Prepared for

GILL RESEARCH DRIVE LLC.

60 RESEARCH RD , HINGHAM, MA

Drawing Title

DETAIL SHEET

Project No.	100-102
Date	10.19.2020
Scale	AS NOTED
Drawn By	AS
Approved By	GC

Drawing No.

C-8.5

C:\2020\Crocker Design Group, LLC\Gabriel Crocker - Projects\100-102 Hingham - 75 Abington St\dwg\Plot Sheets\Site Plan Application_04.dwg, s1 = details, Feb 23, 2021 21:52

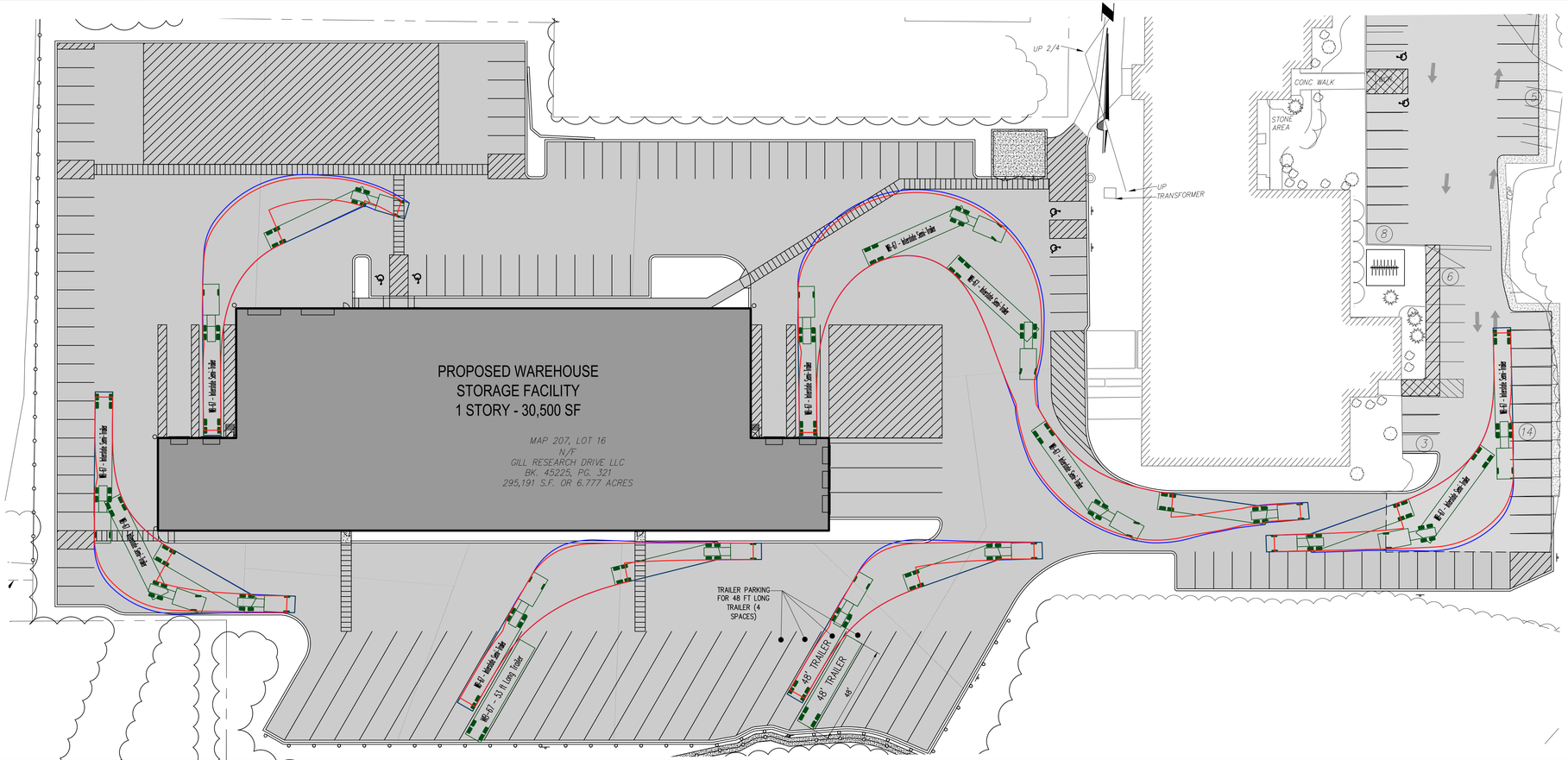

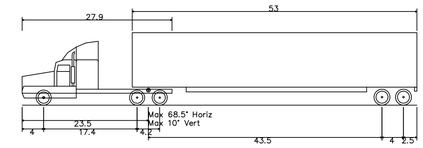

WB-67 – Interstate Semi-Trailer

Overall Length	73.501ft
Overall Width	8.500ft
Overall Body Height	13.500ft
Min Body Ground Clearance	1.334ft
Max Track Width	8.500ft
Lock-to-lock time	6.00s
Max Steering Angle (Virtual)	28.40°

NOTE: McCUSKER-GILL UTILIZES A SEMI-CAB THAT IS SMALLER THAN THIS TYPICAL INTERSTATE HAULER. THEY UTILIZE CABS WITH SINGLE-AXLE AND WITHOUT WINDSCREEN WHICH SHORTENS WHEELBASE AND INCREASES MANEUVERABILITY. THUS , WHAT IS DEPICTED ON THE ANALYSIS IS VERY CONSERVATIVE AND REPRESENTS A LARGER TRUCK THAN WILL BE USED AT THIS FACILITY

30 15 0 30 60

WB-67 TRUCK TURNING

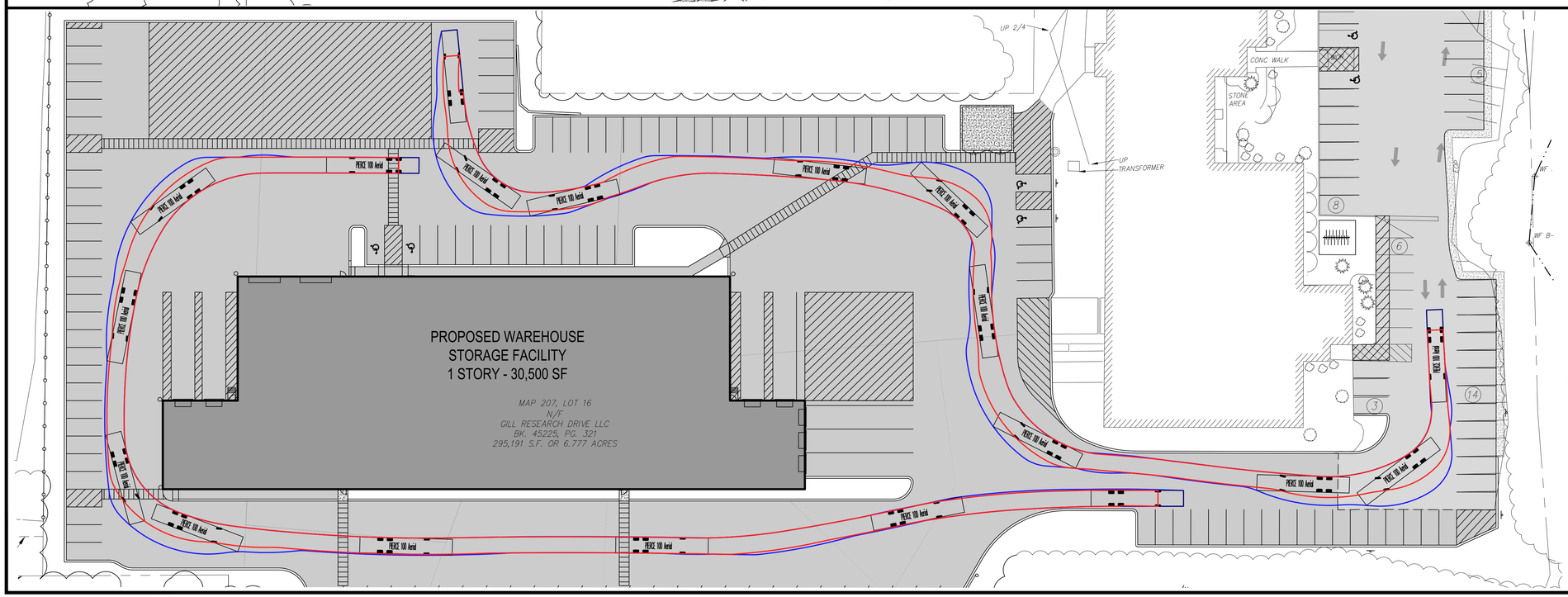

PIERCE 100 AERIAL FIRE TRUCK TURNING

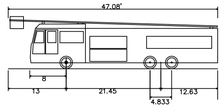

PIERCE 100 Aerial

Overall Length	47.08ft
Overall Width	8.000ft
Overall Body Height	12.33ft
Min Body Ground Clearance	1.335ft
Axle Track	82.92inch
Lock-to-lock time	6.00s
Max Steering Angle (Virtual)	35.20°
Wheel Offset	5.3inch
Wheelbase	257.5inc
Front Overhang	156inch
Chassis Overhang	78inch
Additional Bumper Depth	19inch
Inside turn	24.41ft
Cur to Curb	40.08ft

NOTE: AERIAL LADDER IN THE HORIZONTAL POSITION WAS INCLUDED IN TOTAL LENGTH OF THE FIRE TRUCK VEHICLE TURNING ANALYSIS

Date	Description	No.
2.23.2021	REVISED PER PEER REVIEW COMMENTS	3
1.29.2021	REVISED PER PEER REVIEW COMMENTS	2
1.04.2021	REVISED PER PEER REVIEW COMMENTS	1

Revisions

2-23-2021

COMMONWEALTH OF MASSACHUSETTS
GABRIEL R. CROCKER
CIVIL
No. 47917
REGISTERED PROFESSIONAL ENGINEER

GABRIEL R. CROCKER
PROFESSIONAL ENGINEER, MA REGISTRATION #47917

Crocker Design Group
2 SHARP STREET, UNIT B
HINGHAM, MA 02043
P: 781-919-0808

Project
WAREHOUSE BUILDING
60 RESEARCH RD AND 73 ABINGTON STREET, HINGHAM, MA

Prepared for
GILL RESEARCH DRIVE LLC.
60 RESEARCH RD , HINGHAM, MA

Drawing Title
VEHICLE TURNING PLAN EXHIBIT

Project No.	100-102
Date	10.19.2020
Scale	1"=30'
Drawn By	AS
Approved By	GC

Drawing No.
C-9

C:\CDG\Crocker Design Group, LLC\Gabriel Crocker - Projects\100-102 Hingham - 75 Abington St\dwg\Plot Sheets\Site Plan Application\ 12. VEHICLE TURNING PLAN.dwg, C-9 (CIVIL TRN PLAN, Feb 23, 2021 21:52

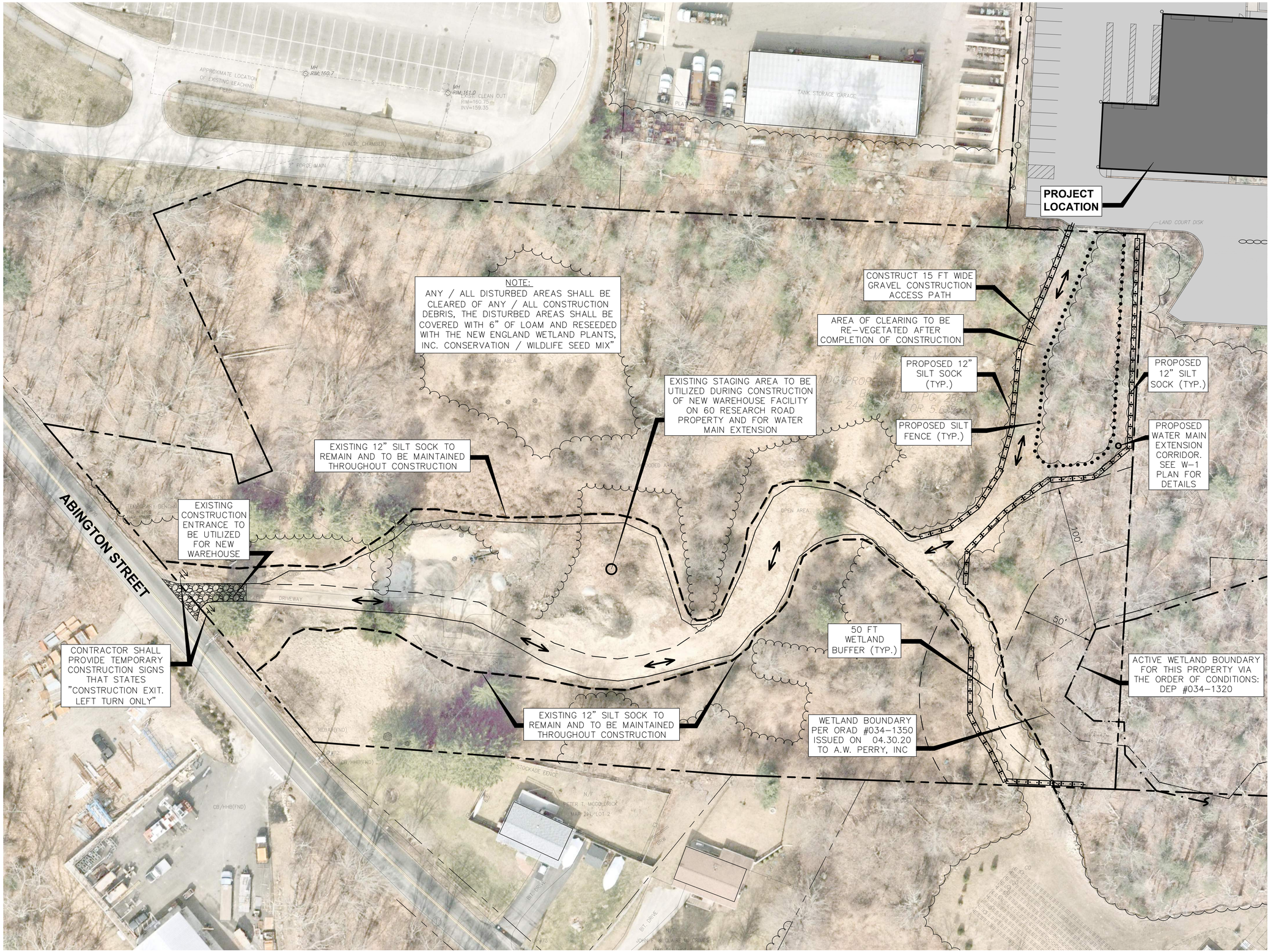

30 15 0 30 60

Date	Description	No.
2.23.2021	REVISED PER PEER REVIEW COMMENTS	3
1.29.2021	REVISED PER PEER REVIEW COMMENTS	2
1.04.2021	REVISED PER PEER REVIEW COMMENTS	1

Revisions

2-23-2021

COMMONWEALTH OF MASSACHUSETTS GABRIEL R. CROCKER CIVIL No. 47917 REGISTERED PROFESSIONAL ENGINEER

GABRIEL R. CROCKER
PROFESSIONAL ENGINEER, MA REGISTRATION #47917

Crocker Design Group
2 SHARP STREET, UNIT B
HINGHAM, MA 02043
P: 781-919-0808

Project
WAREHOUSE BUILDING
60 RESEARCH RD AND 73 ABINGTON STREET, HINGHAM, MA

Prepared for
GILL RESEARCH DRIVE LLC.
60 RESEARCH RD , HINGHAM, MA

Drawing Title
TEMPORARY CONSTRUCTION ACCESS AND LAYDOWN PLAN

Project No.	100-102
Date	10.19.2020
Scale	1"=30'
Drawn By	AS
Approved By	GC

Drawing No.
CA-1

N

MAPS

RESEARCH ROAD

APPROXIMATE 8" D.I. WATER MAIN IN RESEARCH ROAD

100 RESEARCH ROAD

105 RESEARCH ROAD

80 RESEARCH ROAD

70 RESEARCH ROAD

60 RESEARCH ROAD

90 RESEARCH ROAD

EXIST. 8" D.I. WATER MAIN TO REMAIN. PROVIDE 10' WIDE EASEMENT

PROPERTY LINE (TYP.)

EXISTING McCUSTER-GILL, INC. FACILITY. 6.78± AC MAP 27, LOT 16, GILL RESEARCH DRIVE, LLC. 17,778±SF OFFICE 12,348±SF WAREHOUSE 28,236±SF MANUFACTURING

APPROXIMATE LOCATION OF 8" WATER MAIN

PROP. FIRE AND DOMESTIC WATER CONNECTION TO NEW WAREHOUSE

PROPOSED 30,500 SF± WAREHOUSE

PROP. CONNECTION TO EXISTING 8" D.I. WATER MAIN

THIS 5.6 AC± PARCEL BEING AQUIRED BY APPLICANT BUT WILL REMAIN A SEPARATE PARCEL

PROPERTY LINE (TYP.)

PROP. 10FT WIDE EASEMENT

PROP. 8" WATER MAIN EXTENSION

PROP. 8" D.I. WATER MAIN EXTENSION WITHIN 10' WIDE EASEMENT TO CREATE A WATER LOOP BETWEEN RESEARCH ROAD AND ABINGTON STREET WATER MAINS

100FT WETLAND BUFFER

50FT WETLAND BUFFER

100'

50'

WETLAND BOUNDARY (TYP.)

WETLAND

EXIST. 8" D.I. WATER MAIN IN ABINGTON STREET

MAP 211, LOT 1 MDC PROPERTIES-ABINGTON ST, LLC.

EXISTING SERVICE CONNECTION

EXIST. WATER MAIN STUB (8" GATE VALVE WITH CAP)

ABINGTON STREET

PROP. 10FT WIDE EASEMENT

EXIST. 8" D.I. WATER MAIN TROUGH CHILD CARE FACILITY

EXISTING CHILD CARE FACILITY (LITTLE TIKES)

EXIST. 8" D.I. WATER MAIN IN ABINGTON STREET

PROP. 10FT WIDE EASEMENT TO BE GRANTED BY OWNERS OF MAP 212, LOT 13, MDC PROPERTIES-ABINGTON ST, LLC

5.4 AC OF LAND BEING ACQUIRED AND COMBINED WITH 60 RESEARCH ROAD

GENERAL NOTES

1. WATER MAIN SHOWN HERE IN ABINGTON STREET AND TROUGH CHILD CARE FACILITY IS APPROXIMATE AND IS BASED ON AN AS-BUILT PLAN ENTITLED "ABINGTON STREET WATER MAIN AS-BUILT" DONE BY AQUARION AND DATED 8/06/2019.

2. SURVEY MAPPING BASED ON SURVEY DONE BY CHA.

80 40 0 80 160

Date	Description	No.
2.23.2021	REVISED PER PEER REVIEW COMMENTS	3
1.29.2021	REVISED PER PEER REVIEW COMMENTS	2
1.04.2021	REVISED PER PEER REVIEW COMMENTS	1

Revisions

2-23-2021

COMMONWEALTH OF MASSACHUSETTS GABRIEL R. CROCKER CIVIL No.47917 REGISTERED PROFESSIONAL ENGINEER

GABRIEL R. CROCKER
PROFESSIONAL ENGINEER, MA REGISTRATION #47917

Crocker Design Group
2 SHARP STREET, UNIT B
HINGHAM, MA 02043
P: 781-919-0808

Project

WAREHOUSE BUILDING

60 RESEARCH RD AND 73 ABINGTON STREET, HINGHAM, MA

Prepared for

GILL RESEARCH DRIVE LLC.

60 RESEARCH RD , HINGHAM, MA

Drawing Title

PROPOSED WATER MAIN LOOP EXHIBIT

Project No.	100-102
Date	10.19.2020
Scale	1"=80'
Drawn By	AS
Approved By	GC

Drawing No.

W-1

G:\CDG\Crocker Design Group, LLC\Gabriel Crocker - Projects\100-102 Hingham - 73 Abington St\dwg\Plot Sheets\Site Plan Application_ W-1 WATER MAIN EASEMENT EXHIBIT.dwg, CK-UTIL PLAN, Feb 23, 2021 21:52

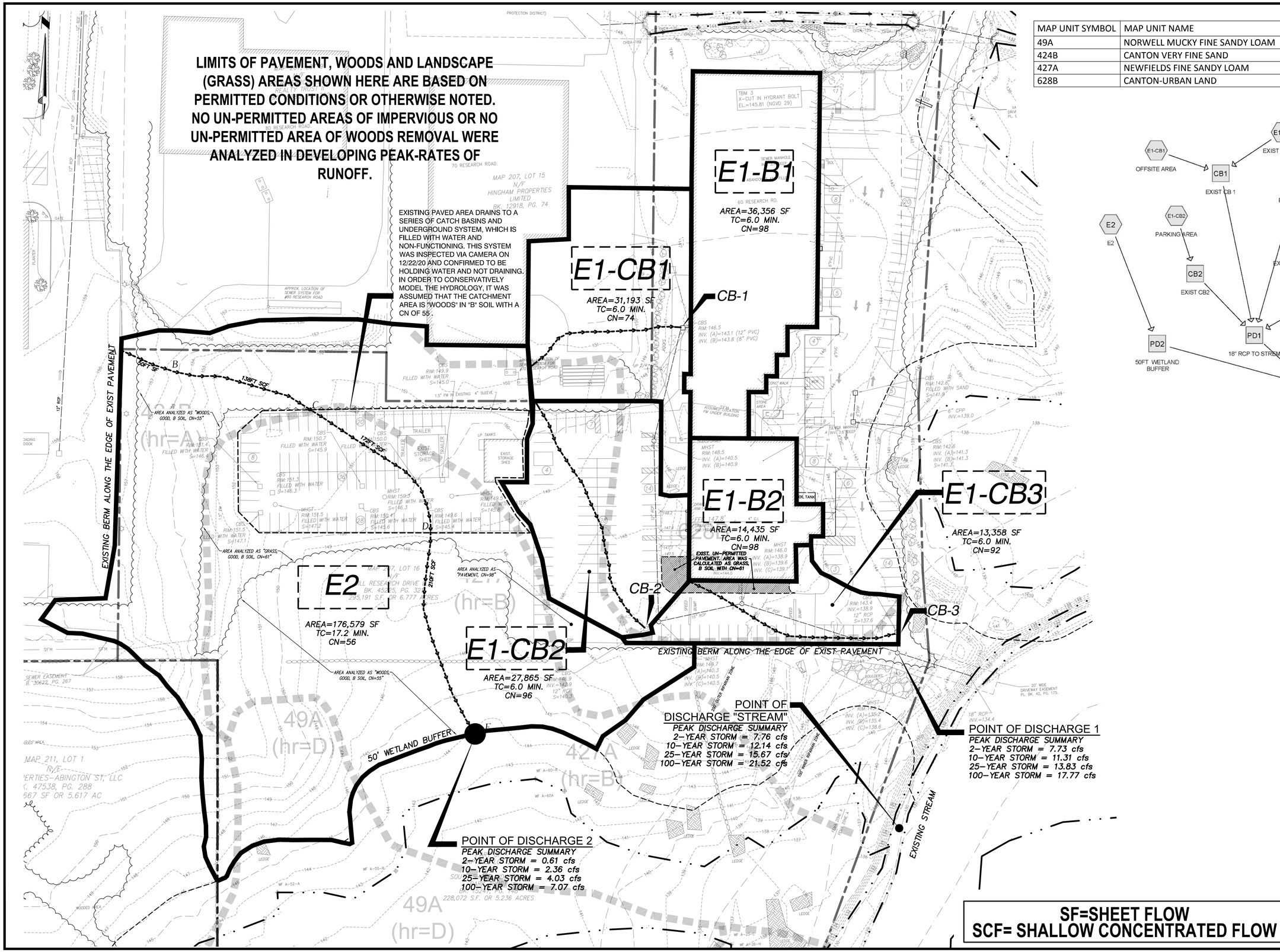

MAP UNIT SYMBOL	MAP UNIT NAME	HYDROLOGIC RATING
49A	NORWELL MUCKY FINE SANDY LOAM	D
424B	CANTON VERY FINE SAND	A
427A	NEWFIELDS FINE SANDY LOAM	B
628B	CANTON-URBAN LAND	A

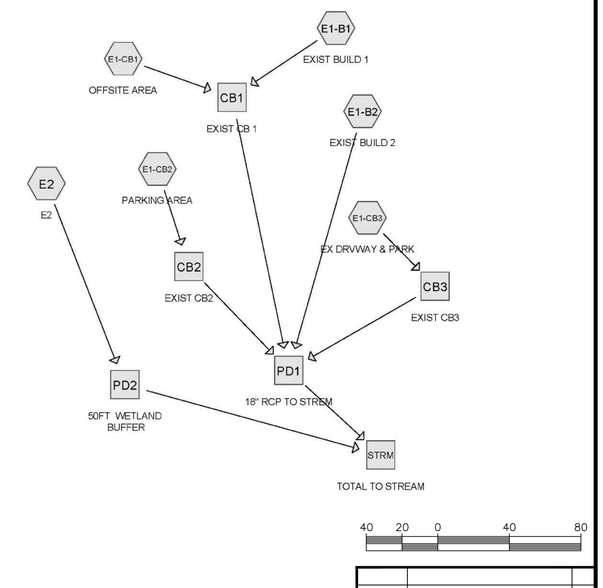

Date	Description	No.
2.23.2021	REVISED PER PEER REVIEW COMMENTS	3
1.29.2021	REVISED PER PEER REVIEW COMMENTS	2
1.04.2021	REVISED PER PEER REVIEW COMMENTS	1

Revisions

2-23-2021

GABRIEL R. CROCKER
PROFESSIONAL ENGINEER, MA REGISTRATION #47917

Crocker Design Group
2 SHARP STREET, UNIT B
HINGHAM, MA 02043
P: 781-919-0808

Project
WAREHOUSE BUILDING
60 RESEARCH RD AND 73 ABINGTON STREET, HINGHAM, MA

Prepared for
GILL RESEARCH DRIVE LLC.
60 RESEARCH RD , HINGHAM, MA

Drawing Title
EXISTING CONDITIONS WATERSHED MAP

Project No.	100-102
Date	10.19.2020
Scale	1"=40'
Drawn By	AS
Approved By	GC

Drawing No.
EH-1

SF=SHEET FLOW
SCF= SHALLOW CONCENTRATED FLOW

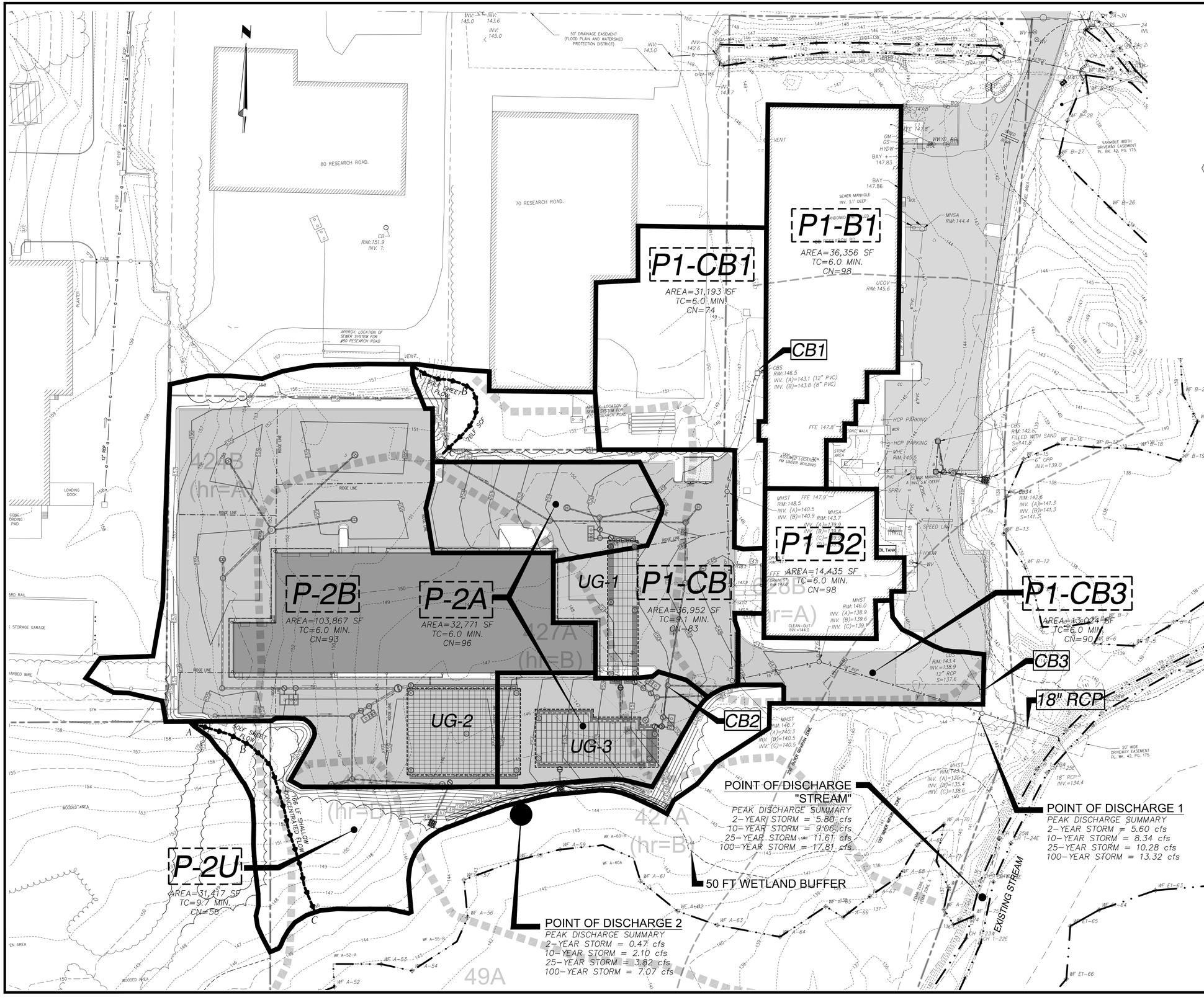

Date	Description	No.
2.23.2021	REVISED PER PEER REVIEW COMMENTS	3
1.29.2021	REVISED PER PEER REVIEW COMMENTS	2
1.04.2021	REVISED PER PEER REVIEW COMMENTS	1

Revisions

2-23-2021

COMMONWEALTH OF MASSACHUSETTS
GABRIEL R. CROCKER
CIVIL
No. 47917
REGISTERED PROFESSIONAL ENGINEER

GABRIEL R. CROCKER
PROFESSIONAL ENGINEER, MA REGISTRATION #47917

Crocker Design Group
2 SHARP STREET, UNIT B
HINGHAM, MA 02043
P: 781-919-0808

Project

WAREHOUSE BUILDING

60 RESEARCH RD AND 73 ABINGTON STREET, HINGHAM, MA

Prepared for

GILL RESEARCH DRIVE LLC.

60 RESEARCH RD , HINGHAM, MA

Drawing Title

PROPOSED CONDITIONS WATERSHED MAP

Project No.	100-102
Date	10.19.2020
Scale	1"=40'
Drawn By	AS
Approved By	GC

Drawing No.

PH-1

C:\CDG\Crocker Design Group, LLC\Gabriel Crocker - Projects\100-102 Hingham - 75 Abington (Living)\Plot Sheets\Site Plan Application_ 010 PROP WATERSHED MAP, Feb 23, 2021 21:53

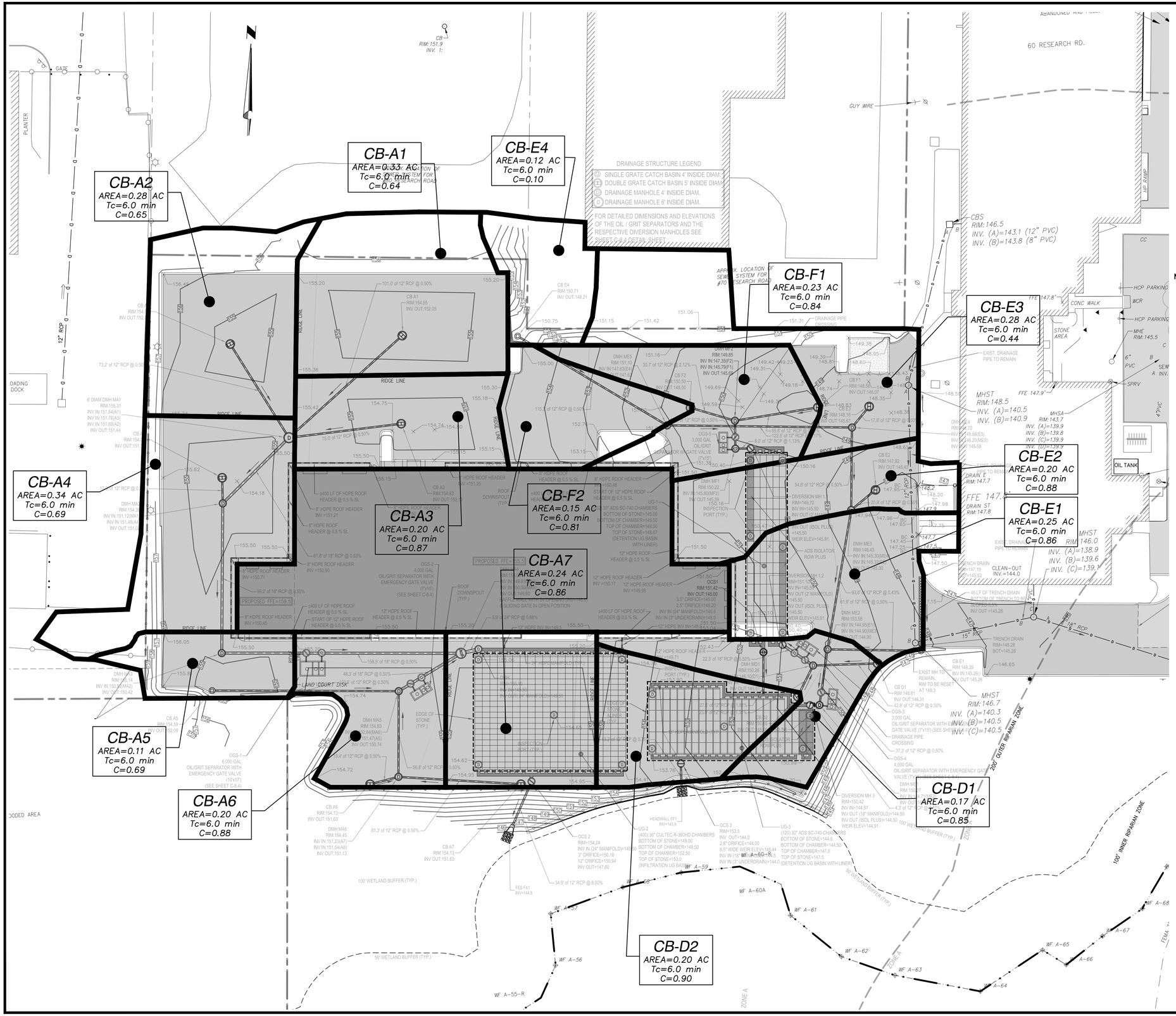

NOTE:

1. **ALL SUB-CATCHMENTS AREAS WHICH EACH DRAIN TO A CATCH BASIN HAVE BEEN DESIGNED TO HAVE LESS THAN ¼ AC OF IMPERVIOUS AREA CONTRIBUTARY TO EACH CATCH BASIN**

REFER TO SHEET PH-3 FOR PROPOSED WATER QUALITY CATCHMENT AREAS, WHICH INCLUDES THE EXISTING PAVED AREAS IN FRONT OF THE BUILDING

30 15 0 30 60

Date	Description	No.
2.23.2021	REVISED PER PEER REVIEW COMMENTS	3
1.29.2021	REVISED PER PEER REVIEW COMMENTS	2
1.04.2021	REVISED PER PEER REVIEW COMMENTS	1

Revisions

2-23-2021

COMMONWEALTH OF MASSACHUSETTS — GABRIEL R. CROCKER — CIVIL — No. 47917 — REGISTERED PROFESSIONAL ENGINEER

GABRIEL R. CROCKER
PROFESSIONAL ENGINEER, MA REGISTRATION #47917

Crocker Design Group
2 SHARP STREET, UNIT B
HINGHAM, MA 02043
P: 781-919-0808

Project

WAREHOUSE BUILDING

60 RESEARCH RD AND 73 ABINGTON STREET, HINGHAM, MA

Prepared for

GILL RESEARCH DRIVE LLC.

60 RESEARCH RD , HINGHAM, MA

Drawing Title

PROPOSED CONDITIONS SUB-CATCHMENTS MAP

Project No. 100-102	Drawing No. **PH-2**
Date 10.19.2020	
Scale 1"=30'	
Drawn By AS	
Approved By GC	

C:\CDG\Crocker Design Group, LLC\Gabriel Crocker - Projects\100-102 Hingham - 73 Abington St\dwg\Plot Sheets\Site Plan Application_ 010 PROP WATERSHED MAP, Feb 23, 2021 21:53

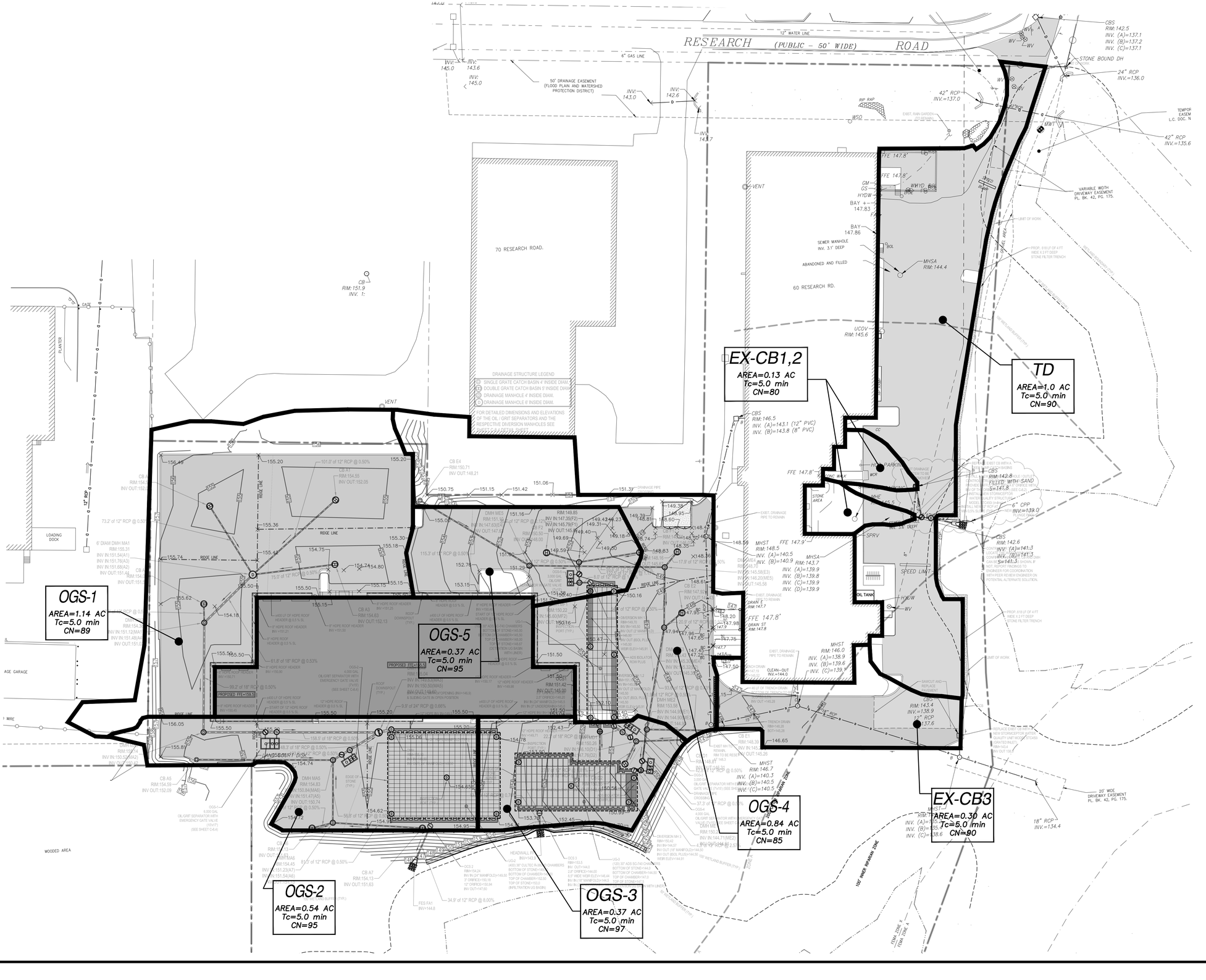
RESEARCH (PUBLIC – 50' WIDE) ROAD
12" WATER LINE
6" GAS LINE
50' DRAINAGE EASEMENT (FLOOD PLAIN AND WATERSHED PROTECTION DISTRICT)
70 RESEARCH ROAD.
60 RESEARCH RD.
DRAINAGE STRUCTURE LEGEND
SINGLE GRATE CATCH BASIN 4' INSIDE DIAM.
DOUBLE GRATE CATCH BASIN 6' INSIDE DIAM.
DRAINAGE MANHOLE 4' INSIDE DIAM.
DRAINAGE MANHOLE 6' INSIDE DIAM.
FOR DETAILED DIMENSIONS AND ELEVATIONS OF THE OIL / GRIT SEPARATORS AND THE RESPECTIVE DIVERSION MANHOLES SEE SHEET C-6.0
OGS-1
AREA=1.14 AC
Tc=5.0 min
CN=89
OGS-2
AREA=0.54 AC
Tc=5.0 min
CN=95
OGS-3
AREA=0.37 AC
Tc=5.0 min
CN=97
OGS-4
AREA=0.84 AC
Tc=5.0 min
CN=85
OGS-5
AREA=0.37 AC
Tc=5.0 min
CN=95
EX-CB1,2
AREA=0.13 AC
Tc=5.0 min
CN=80
EX-CB3
AREA=0.30 AC
Tc=5.0 min
CN=90
TD
AREA=1.0 AC
Tc=5.0 min
CN=90
LOADING DOCK
WOODED AREA
PLANTER
GATE
VENT
LANDSCAPE BUFFER (TYP.)
100' WETLAND BUFFER (TYP.)
100' INNER RIPARIAN ZONE
150' OUTER RIPARIAN ZONE
LIMIT OF WORK
PROP. 618 LF OF 4 FT WIDE X 2 FT DEEP STONE FILTER TRENCH
VARIABLE WIDTH DRIVEWAY EASEMENT PL. BK. 42, PG. 175.
20' WIDE DRIVEWAY EASEMENT PL. BK. 42, PG. 175.
TEMPOR EASEM L.C. DOC. N
STONE BOUND DH
SEWER MANHOLE INV. 3.1' DEEP
ABANDONED AND FILLED
EXIST. RAIN GARDEN
RIP RAP
STONE AREA
OIL TANK
SPEED LIMIT
SPRV
HDW
WV
UCOV RIM:145.6
MHSA RIM:144.4
MHST RIM:146.0 INV. (A)=138.9 INV. (B)=139.6 INV. (C)=139.6
MHST RIM:146.7 INV. (A)=140.3 INV. (B)=140.5 INV. (C)=140.5
MHST RIM:148.5 INV. (A)=140.5 INV. (B)=140.9 INV. (C)=139.9 INV. (D)=139.9
MHSA RIM:143.7
CBS RIM:142.5 INV. (A)=137.1 INV. (B)=137.2 INV. (C)=137.1
CBS RIM:142.6 INV. (A)=141.3 INV. (B)=141.3 S=141.3
CBS RIM:142.8 FILLED WITH SAND
CBS RIM:143.4 INV.=138.9
CB RIM:151.9 INV. 1:
24" RCP INV.=136.0
42" RCP INV.=137.0
42" RCP INV.=135.6
6" CPP INV=139.0
18" RCP INV.=134.4
FFE 147.8'
FFE 147.9'
DRAIN T RIM: 147.7
DRAIN ST RIM: 147.8
CLEAN-OUT INV.=144.0
BAY 147.83
BAY 147.86
CM
CO
HYDW
WWYD
BAY
CC
ICR
PARK
SPEED HUMP
SAWCUT AND REPLACE
REPLACE EXIST. MH WITH NEW STORMCEPTOR (WITH QUALITY UNIT INSERT) STORM STRUCTURE (GRATED INLET) RIM=143.4 INV OUT 139.9
EXIST CB WITH A DEEP SUMP CATCH BASINS
EXIST. DRAINAGE PIPE TO REMAIN
TRENCH DRAIN RIM:148.38 BOT=145.28
CB E1 RIM:148.39 INV IN 145.26 INV OUT:145.26
CB E4 RIM:150.71 INV OUT:148.21
CB A1 RIM:154.55 INV OUT:152.05
CB A3 RIM:154.63 INV OUT:152.13
CB A5 RIM:154.59 INV OUT:152.09
CB A6 RIM:154.45 INV OUT:151.25(A7) INV IN:151.54(A6)
CB A7 RIM:154.13 INV OUT:151.63
DMH MA5 RIM:154.83 INV IN:151.47(A5) INV OUT:150.74 S=0.50%(MA5)
DMH MA6 RIM:154.83 INV IN:151.12(MA6) INV IN:151.46(A7) INV OUT:151.12
DMH ME5 RIM:151.36 INV OUT:147.83
DMH ME4 RIM:151.60 INV OUT:147.98
DMH ME3 RIM:151.16 INV OUT:147.63
DMH ME2 RIM:150.50 INV OUT:148.00
DMH ME1 RIM:149.85 INV IN:147.35(F2) INV IN:145.79(F1) INV OUT:145.79
DMH MW1 RIM:149.39 INV OUT:145.95
DMH MW2 RIM:148.81 INV OUT:145.60
DMH MW3 RIM:148.74 INV OUT:145.58(E3) INV IN:146.20(ME5) INV OUT:145.58
DMH MW4 RIM:148.83 INV OUT:145.58
DMH MW5 RIM:148.16 INV OUT:145.58
DMH MW6 RIM:147.94 INV OUT:145.58
DMH MW7 RIM:147.96 INV OUT:145.58
DMH MW8 RIM:147.65 INV OUT:145.58
DMH MW9 RIM:147.47 INV OUT:145.58
DMH MW10 RIM:147.25 INV OUT:145.58
DMH MW11 RIM:147.07 INV OUT:145.58
DMH MW12 RIM:146.89 INV OUT:145.58
DMH MW13 RIM:146.71 INV OUT:145.58
DMH MW14 RIM:146.53 INV OUT:145.58
DMH MW15 RIM:146.35 INV OUT:145.58
DMH MW16 RIM:146.16 INV OUT:145.58
DMH MW17 RIM:145.98 INV OUT:145.58
DMH MW18 RIM:145.80 INV OUT:145.58
DMH MW19 RIM:145.62 INV OUT:145.58
DMH MW20 RIM:145.44 INV OUT:145.58
DMH MW21 RIM:145.26 INV OUT:145.58
DMH MW22 RIM:145.08 INV OUT:145.58
DMH MW23 RIM:144.90 INV OUT:145.58
DMH