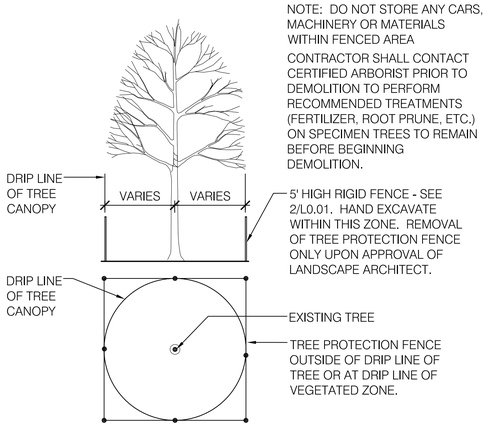

1 TREE PROTECTION DETAIL
SCALE: 3/4" = 1'-0"

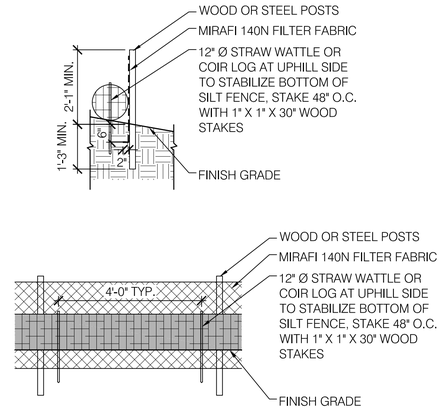

2 EROSION CONTROL DETAIL
SCALE: 1/2" = 1'-0"

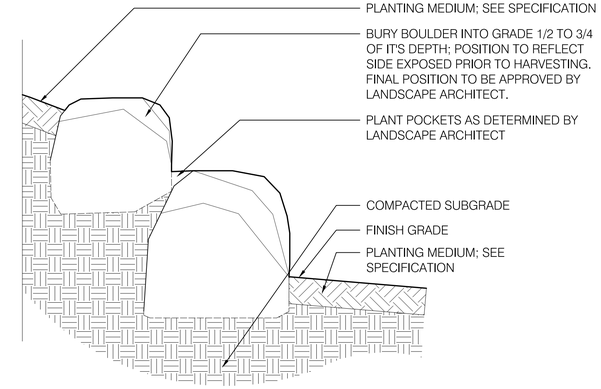

3 BOULDER RETAINING WALL
SCALE: 3/8" = 1'-0"
SECTION

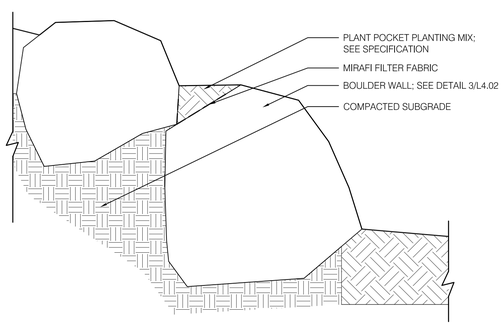

4 BOULDER RETAINING WALL - PLANT POCKETS
SCALE: ¾ " = 1'-0"
SECTION

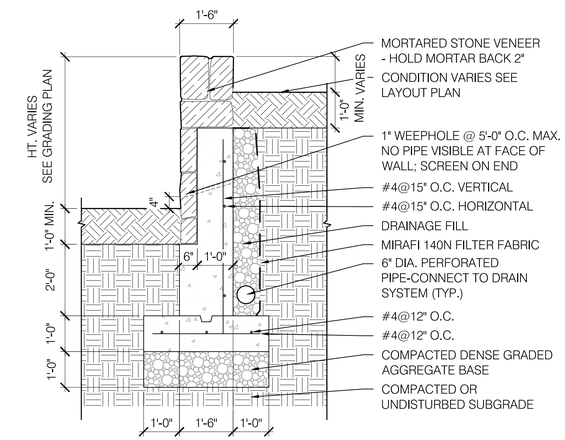

5 STONE VENEER PLANTER WALL
SCALE: 1/2" = 1'-0"
SECTION

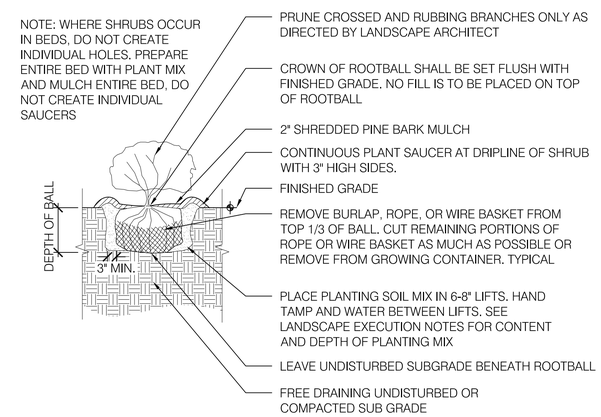

5 WOODY SHRUB PLANTING DETAIL
SCALE: 3/4" = 1'-0"
SECTION

NOTES:
LOOSEN ROOT SYSTEM BEFORE PLANTING. IF PLANT IS POT BOUND CUT ROOT MASS INTO 4 SECTIONS AND SPREAD OUT BEFORE SETTING IN HOLE.

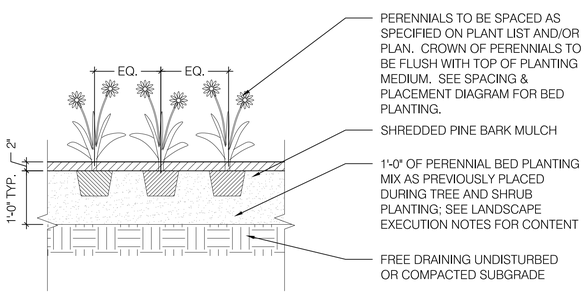

PERENNIAL PLANTING DETAIL
SCALE: 1/2 " = 1'-0"
SECTION

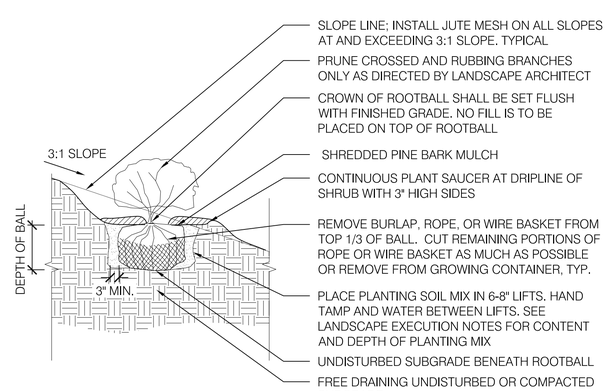

5 PLANTING ON SLOPE DETAIL
SCALE: 1/2" = 1'-0"
SECTION

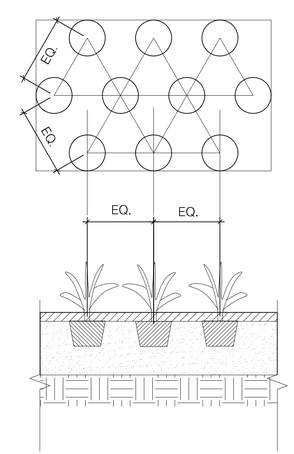

5 PLANT SPACING CHART
SCALE: 1/2" = 1'-0"

66 BURDITT AVENUE

Hingham, Massachusetts

GENERAL NOTES:

FOR PERMITTING ONLY
NOT FOR CONSTRUCTION

GREGORY LOMBARDI DESIGN, INC.
Landscape Architecture
2235 Massachusetts Avenue
Cambridge, Massachusetts 02140
Phone 617.492.2808 Fax 617.492.2904

No.	Date	Comment

Date: 9 SEPTEMBER 2020
Scale:
Project No.: 19032
Drawing by: HB/JS
Checked by: RV/GL

CONSERVATION DETAILS

©Gregory Lombardi Design Incorporated